REV STATUS OF SHEETS			REV		B	B	A	B	B								B								B											B		B		A	A			
			SHEET		1	2	3	4	5	6	7	8	9	10	11	12	13	14	15	16	17	18	19	20	21	22	23	24	25	26	27	28	29	30	31	32	33	34	35	36	37	38	39	40
REV			B																		B	B	B		A	A	A	A	A	A	A	A	A	B	B	B	B	B						
SHEET	41	42	43	44	45	46	47	48	49	50	51	52	53	54	55	56	57	58	59	60	61	62	63	64	65	66	67	68	69	70	71	72	73	74	75	76	77	78	79	80	81	82	83	84
REV																																												
SHEET	85	86	87	88	89	90	91	92	93	94	95	96	97	98	99	100	101	102	103	104	105	106	107	108	109	110	111	112	113	114	115	116	117	118	119	120	121	122	123	124	125	126	127	128
REV													D	D	D																													
SHEET	129	130	131	132	133	134	135	136	137	138	139	140	141	142	143																													

NOTE: THIS BOOKLET IN COMBINATION WITH 501 SK4870232 SUPERSEDES TYPE PLAN S3801-1398157 "VENT. GEN NOTES & DETAILS".

PRINTS ISSUED

NO.	REVISION DESCRIPTION	DATE	APPV
	SEE SHEET NO 2		

NORFOLK NAVAL SHIPYARD
PORTSMOUTH, VIRGINIA

SCALE NONE = 1 FT.

DRAWN BY TARKENTON & FOLEY DATE 2-7-75

BRANCH SUPVR. A. P. [illegible]

TRACED BY —

CHIEF DESIGN ENGR. J. R. Ditton

CHECKED BY SHOP 17 & CODE 262

ABBREV. TITLE VENT STD DET SURFACE SHIPS

VENTILATION STANDARD DETAILS FOR SURFACE SHIPS

	BUREAU OF SHIPS NUMBER			REV.	SHEET
B	53711	501	SK 4870233	D	1 of 143

REVISIONS

REV	SHEET	DESCRIPTION	DATE	APPD
A	3	TITLE FOR DET. 32 MODIFIED - "CONTRACTING" SUBSTITUTED FOR "BELLMOUTH".		
	4	ADDED DET. 60-68 TO TABLE OF CONTENTS		
	36	END OF TERM. SHOWN WITH ROLLED/WIRE EDGE TO SUIT SHOP PRACTICE.	4/31/7	[illegible]
	37	MODIFIED DET FROM BELLMOUTH TO CONTRACTING TYPE "C" TERM. TO SUIT LATEST DESIGN PRACTICE		
	43	PAD IDENTIFIED AS RAILING FLG VS FLOOR FLG. ADDED STOCK NO. TO SAME.		
	65-73	ADDED DETAILS 60-68 TO SUIT DEVELOPMENTS	CEF	[illegible]
B	5	DELETED REF 3 "SHOP PROCEDURES"		
	13	NOTE 3 MODIFIED		
	21	NOTE 5 & 7 - MIL-S-22698 WAS QQ-S-698		
	32	"T" DIM. COL. ADDED FOR INFO		
	34	DELETED INDICATION OF "SCOOPTROL"	4/1/13	[illegible]
	43	MODIFIED INSTL DETAIL TO SIMPLIFY THERMO TESTING		
	61,62	EDITORIAL MODS TO SUIT ADDITION OF INSTL NOTES		
	63	"INSTL NOTES" DET. WAS "PORT. TEST COVERS"		
	74-78	ADDED DETAILS 69-72; DET. 73 WAS DET. 58.	DGT/CEF 3/23/03	
C	3,4	DET 40,41,56,57,58 & 68 AND RESPECTIVE SHEETS MADE ALTERNATE DETAILS.	5/21/03	[illegible]
	5	ADDED REF 8 & 9.		
	6	ASTERISK LOCATED.		
	3,79-140	ADDED DETAILS 74-135 FROM REF 9.		
D	141	ADDED DETAIL 136, NEW 6" X 6" ACCESS COVER.	4/6/05	[illegible]
	142	ADDED DETAIL 137, NEW DIFFUSER TERMINAL BOX.		
	143	ADDED DETAIL 138, NEW WATERTIGHT "COLLAR" FLANGE.		

REVISIONS

REV	SHEET	DESCRIPTION	DATE	AP

DWG NO. 501 — 4870233

STANDARD DETAILS | SHEET 2 OF 14

TABLE OF CONTENTS

DETAIL NO.	SHEET NO.	TITLE
-	1	TITLE PAGE
-	2	REVISIONS
-	3,4	TABLE OF CONTENTS
-	5	REFERENCES
1	6	ASTERISK (*) & LOCATION OF DUCT OFFSET
2	7	ANGLE OF SLOPE FOR DUCT CHANGE OF SHAPE / SIZE
3	8	LONGITUDINAL SEAMS FOR NWT DUCTS
4	9	BRANCH CONNECTIONS FOR DUCTS
5	10	WELDED SEAMS & BUTT JOINTS - STL & AL DUCTS
6	11	RECT FLG DET FOR AL DUCT & STL OR AL COAMING
7	12	RECT FLG DET FOR STL DUCT AND COAMING
8	13	ROUND FLANGE FOR WTRTT & NWT DUCT
9	14	FLAT FLANGE CONN FOR NWT STL DUCT
10	15	ELBOW FOR ROUND WTRTT DUCT
11	16	ELBOW FOR ROUND NWT DUCT
12	17	FLEX. ELBOW FOR ROUND NWT DUCT
13	18	STIFFENING PL & ANGLE FOR LARGE DUCTS
14	19	INTERNAL DUCT STIFF. FOR TEST HEAD PRESS.
15	20	HANGER FOR GR "A" SHOCK DUCTWORK (DETAILS)
16	21	HANGER FOR GR "A" SHOCK DUCTWORK (NOTES)
17	22	HANGERS FOR GR "C" SHOCK DUCTWORK
18	23	COAMING THRU STL OR AL DECK - TYPICAL
19	24	ROUND OR F.O. COAM & ELBOW THRU DK & BHD
20	25	DK COAM PROVIDING LIQUID SPILLAGE PROTECTION
21	26	COAMING THRU BALLISTIC DECKS OR BULKHEADS
22	27	COAM THRU STL OR AL BHDS & GRIDERS - TYP
23	28	HOLE CUT & WELDING INFO FOR STL & AL COAM
24	29	COMBINATION COAMING
25	30	ALTERNATE METHOD - COMBINATION COAM
26	31	TERM BOX FOR RECT COML DIFFUSER
27	32	TERM BOX FOR NAVY STANDARD DIFFUSER
28	33	MULTI - VENT TERM MOUNTING DETAILS
29	34	TERM BOX FOR GRILLE TYPE DIFFUSER
30	35	DETAIL OF SLOTTED DUCT TERM
31	36	DETAIL OF TYPE "J" SUPPLY TERM
32	37	DET OF TYPE "C" CONTRACTING EXHAUST TERM
33	38	DETAIL OF SCREEN FOR TERMINAL
34	39	INTAKE SCREEN FOR VERTICAL MOUNTED FAN IN REFRIG STORES
35	40	DUCT CONN AT GREASE INTERCEPTOR HOOD
36	41	LENT BAG & CONN FOR DRYER EXHAUST
37	42	WELDING SLAB EXHAUST TERMINAL
38	43	TMERMOSTAT MOUNT PAD FOR COMMISSARY SPACES
39	44	METHOD OF SECURING TEMPERTURE CONTACT MAKER
40	45	DRAIN FOR NWT DUCT (ALTERNATE METHOD)
41	46	DRAIN FOR WTRTT DUCT (ALTERNATE METHOD)
42	47	DET OF MTG PAD FOR AERODYNE AIR FLOW MONITOR
43	48	QUADRANT DAMPER (RECT) A.T. CASING - GR "A" SHOCK
44	49	NWT FAN - DUCT FLEXIBLE CONNECTION
45	50	BACKING RING FOR WTRTT/A.T. FAN - DUCT FLEX CONN
46	51	BOLTED ACCESS PLATE - WTRTT & NWT
47	52	WEATHER SCREEN MOUNTING IN AL STRUCTURE
48	53	WEATHER SCREEN MOUNTING IN STL STRUCTURE
49	54	MOUNTING AL BELLMOUTH TO STL PLENUM
50	55	ORIFICE PLATE
51	56	SECURING THERMAL INSUL AT DUCT FLANGE
52	57	ACOUSTIC INSUL - TYPE "A" (NWT)
53	58	ACOUSTIC INSUL - TYPE "K" (WTRTT)
54	59	ACOUSTICALLY TREATED PLENUM - TYPICAL
55	60	ACOUSTICALLY TREATED TERMINAL BOX
56	61	MTG DET NAVY STD TYPE I FILTER GAGE (ALT MTHD)
57	62	MTG DET NAVY STD TY II & III FLTR GAGE (ALT MTHD)
58	63	INSTL NOTES FOR FLTR & FLM ARSR GAGES (ALT MTHD)
59	64	DETAIL FLEXIBLE HOSE CONNECTION
60	65	MTG OF REGISTER/GRILLES IN SUSPENDED CEILING
61	66	TYPE "E" (ADJUSTABLE BLAST) TERMINAL
62	67	VOLUME DAMPER FOR NWT ROUND & RECT DUCT
63	68	BALANCING DAMPER / SPLITTER
64	69	NAVY STANDARD VANED DUCT TURN
65	70	NAVY STANDARD VANES FOR VANED TURNS
66	71	ALTERNATE VANED TURN FOR RECT DUCT

TABLE OF CONTENTS

DETAIL NO.	SHEET NO.	TITLE	DETAIL NO.	SHEET NO.	TITLE
67	72	MTHD OF PENTRATING AL DK / BHD WITH STEEL DUCT	102	107	TYPE "M" COVER - SECTIONAL VIEW - ELEVATION
68	73	TYP EXHAUST HOOD FOR LAUNDRY PRESS (ALT MTHD)	103	108	TYPE "M" COVER - SECTION
69	74	CENTRIFUGAL FAN TYPICAL SHAFT SEAL	104	109	TYPE "M" COVER, TABLE OF DIMENSIONS & DETAILS
70	75	NONWATERTIGHT VENT CLOSURE	105	110	TYPE "M" COVER - SPL FLG ASSY
71	76	CAPILLARY TUBE STUFFING BOX	106	111	TYPE "M" COVER - MISC DETAILS
72	77	BANDED SLEEVE CONNECTOR	107	112	TYPE "M" COVER - SCREEN & FRAME DETAILS
73	78	PORTABLE TEST COVER & STOWAGE	108	113	TYPE "M" COVER, TYPICAL INSTALLATION
74	79	L/M -LOW POINT DUCT & PLENUM DRAINS	109	114	TYPE "M" COVER - HANDLE - MISC DETAILS
75	80	LOW POINT DUCT & PLENUM DRAINS (PFD MTHD)	110	115	LIST OF MATL - DISHWASHER, LAUNDRY & CANOPY
76	81	LOW POINT DUCT & PLENUM DRAINS (PFD MTHD)	111	116	DISHWASHER HOOD, PLAN VIEW
77	82	NOTES - THERMO CONTROL DETAILS	112	117	DISHWASHER HOOD, ELEVATION
78	83	LIST OF MATL - THERMO CONTROL DETAILS	113	118	DISHWASHER HOOD, END VIEW & DETAILS
79	84	MOUNT FOR TYPE "R" THERMOSTAT	114	119	LAUNDRY PRESS HOOD, PLAN VIEW (PFD MTHD)
80	85	MOUNT FOR 2PD THERMOSTAT	115	120	LAUNDRY PRESS HOOD, FRONT ELEVATION (PFD MTHD)
81	86	MOUNT FOR TYPE "W" THERMOSTAT BULB	116	121	LAUNDRY PRESS HOOD, END ELEVATION (PFD MTHD)
82	87	MOUNT FOR TYPE "L" THERMOSTAT BULB	117	122	CANOPY, HOOD
83	88	MOUNT & GUARD FOR 222-10 THERMO, MODEL NNM (PFD MTHD)	118	123	LIST OF MATERIAL FOR TYPE "F" COVERS
84	89	DUCT MOUNTED THERMOMETER	119	124	LIST OF MATL & NOTES FOR TYPE "F" COVERS
85	90	DK & BHD PEN FTG FOR THERMO TUBING	120	125	3 DIA - 6 DIA TYPE "F" COVER
86	91	PROTECTIVE GUARD FOR THERMOSTATS TUBING	121	126	6-1/2 - 22 DIA TYPE "F" COVERS
87	92	SPL FOR EXCESS THERMO TUBING SPRT CLIPS	122	127	TYPE "F" COVER, STRRONGBACK & HINGE
88	93	GAGE FOR AIR FILTER & FLAME ARSR NOTES	123	128	TYPE "F" COVER, STRBK & HINGE
89	94	L/M & NOTES - AIR FILTER & FLAME ARSR	124	129	TYPE "F" COVER, MISC DETAILS
90	95	AIR FILTER & FLAME ARRESTER PRESSURE LOSS	125	130	NOTES FOR HIGH EFFICIENCY FILTER HOUSING
91	96	TYPE I FILTER GAGE (PREFERRED METHOD)	126	131	LIST OF MATL HIGH EFFICIENCY FILTER HOUSING
92	97	TYPE II FILTER GAGE (PREFERRED METHOD)	127	132	HIGH EFFICIENCY FILTER HOUSING TYPES
93	98	TYPE III FILTER GAGE (PREFERRED METHOD)	128	133	TYPE "E" FILTER HOUSING
94	99	STATIC TIP INSTALLATION (PFD MTHD)	129	134	TYPE "F" & "G" FILTER HOUSING
95	100	FILTER GAGE TUBING ARRANGEMENTS (PFD MTHD)	130	135	ABSOULTE FILTER RETAINING FRAMES
96	101	GAGE CONNECTION TO FAN COIL ASSY	131	136	HIGH EFFICIENCY DUMMY FILTER HOUSING
97	102	L/M & NOTES - MAG OVERFLOW CHECK VALVES	132	137	LIST OF MATERIAL-FDN ST STRUCT FAN COIL UNIT
98	103	UPPER LVL CHK VLV ASSY - MAGAGAZINE OVERFLOW	133	138	FDN ST STRL FAN COIL UNIT
99	104	LWR LVL CHK VLV - MAGAZINE OVERFLOW	134	139	LIST OF MATERIAL-FDN AL STRUCT FAN COIL UNIT
100	105	LIST OF MATERIAL TYPE "M" COVERS	135	140	FDN AL STRL FAN COIL UNIT
101	106	LIST OF MATERIAL & NOTES TYPE "M" COVERS			

DWG NO. 501-4870233	REV
STANDARD DETAILS	SHEET 4 OF 14

REFERENCES

NO.	TITLE	NAVSHIPS DWG NO
1	VENTILATION GENERAL NOTES FOR SURFACE SHIPS	53711-501-4870232
2	PUBLICATION NAVSHIPS 0900-000-1000	-
3	-	-
4	CIRCULAR DIFFUSING TERMINALS - ALUMINUM	804-690702
5	STANDARD AIR FILTER HOUSING	53711-501-5001044
6	STANDARD HI-EFFICIENCY FILTER INSTL	STD 501-1131922
7	STATIC TIP ASSY FOR DIFF. PRESS. GAGES	53711-501-SK1660074
8	ACCESS COVERS VENT QUICK ACTING	53711-803-6397256
9	PSNS VENT STD DETS & GENERAL NOTES	53711-501-5287967

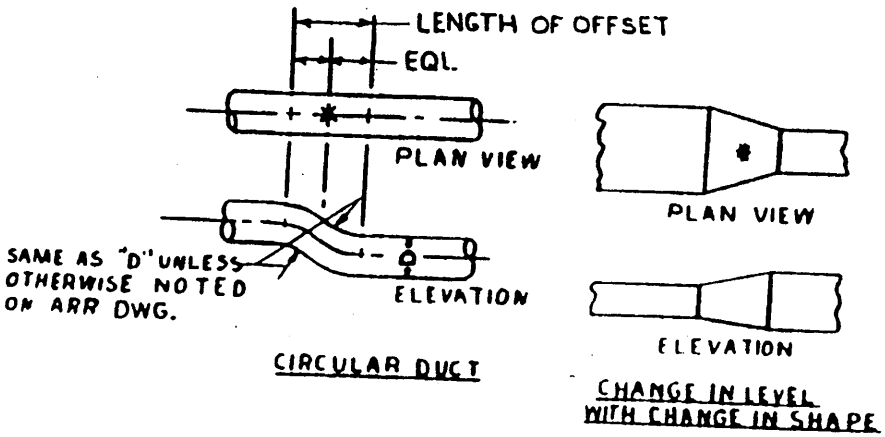

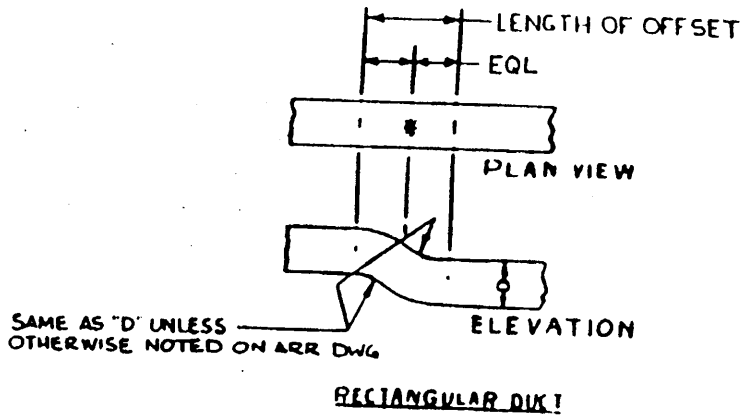

ASTERISK (*) AND LOCATION OF OFFSETS

SEE NOTE 14-C, REF 1

DETAIL 1	
DWG NO. 501-4870233	
STANDARD DETAILS	SHEET 6 OF 14

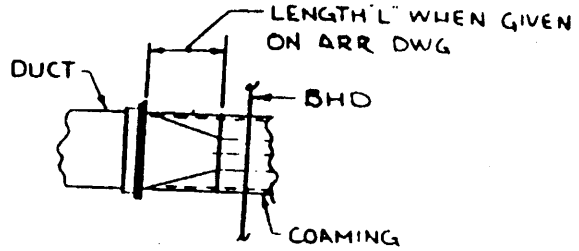

WT

TRANSFORMATION LENGTH

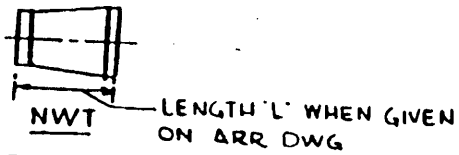

TRANSFORMATION LENGTH

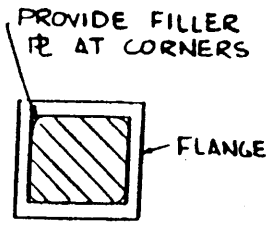

SECTION "A-A"

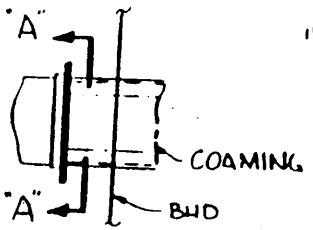

CHANGE FROM RADIUS CORNER WITHOUT USE OF TRANSFORMATION

SEE NOTE 20-C, REF. 1

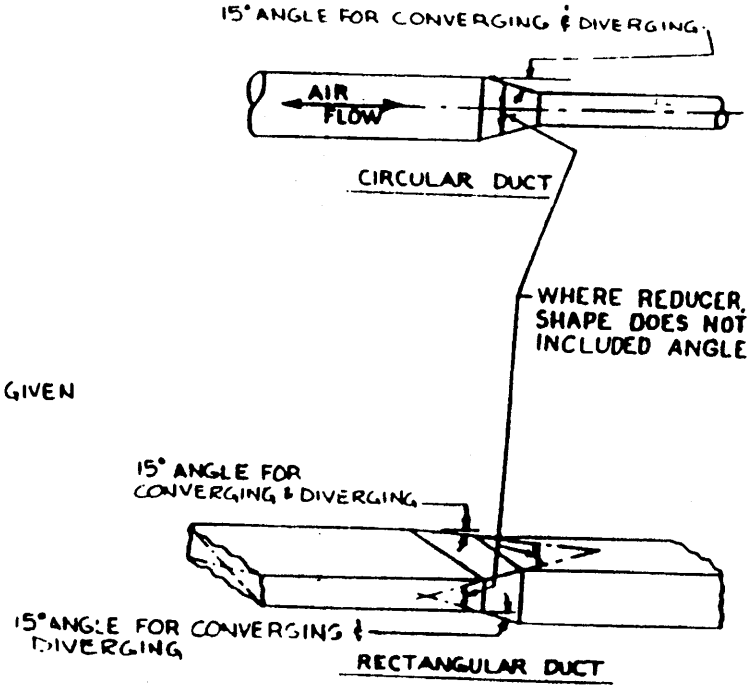

ANGLE OF SLOPE FOR DUCT CHANGE OF SIZE OR SHAPE

SEE NOTE 17 C, REF. 1

DETAIL 2

DWG NO. 501 – 4870233

STANDARD DETAILS

SHEET 7 OF 14

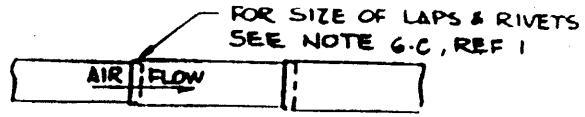

TYPICAL CIRCUMFERENTIAL SEAMS WITH RESPECT TO AIR FLOW

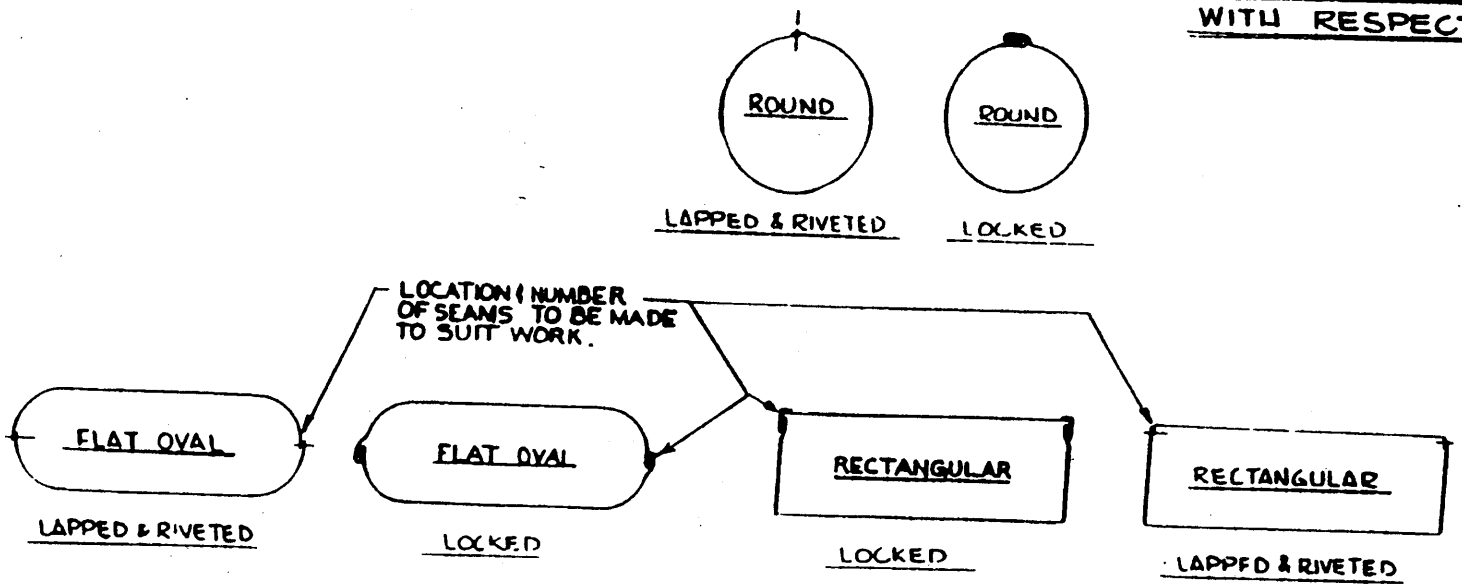

LONGITUDINAL SEAMS FOR NWT DUCTS

SEE NOTE 6·C, REF. 1

DETAIL 3	
DWG NO. 501 – 4870233	
STANDARD DETAILS	SHEET 8 OF 14

NOTE: THE ITEMS SHOWN HEREON ARE SUITABLE FOR GRADE 'A' SHOCK APPLICATION BY EXTENSION FROM VENTILATION DUCTWORK TESTED AS INDICATED ON SHENANDOAH LAB TEST REPORTS C-197, C-216, C-218, C-220 AND APPROVED BY SUPSHIPS LTR CVAN GB CL/9380-1/9400-1 SER 283-1042 DATED JUNE 8, 1972

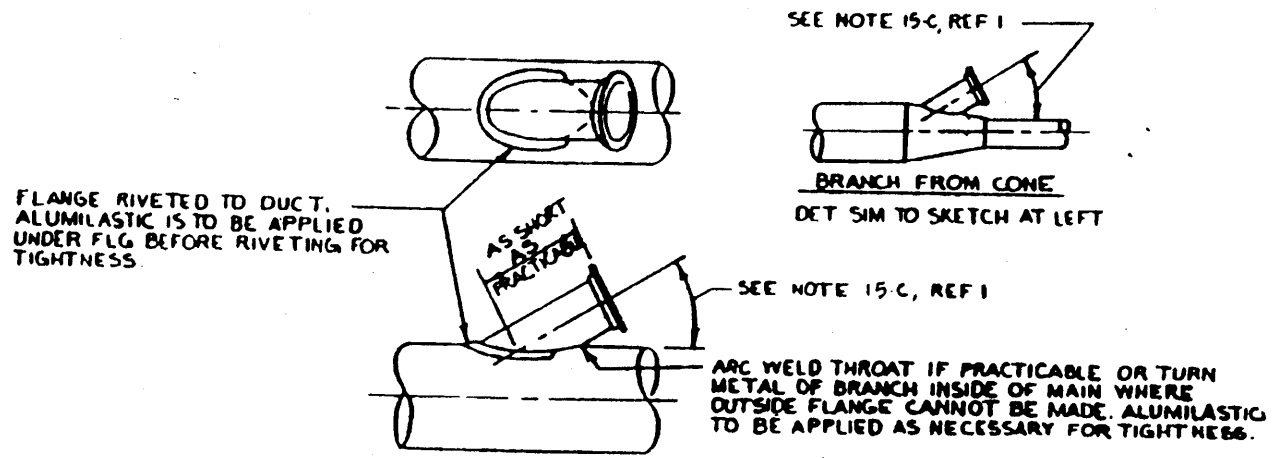

BRANCH CONNECTIONS FOR DUCTS

DETAIL OF CONNECTING PIECE FROM DUCT TO BRANCH (NWT DUCT)

(SUITABLE FOR GRADE 'A' SHOCK)

DETAIL 4

DWG NO. 501— 4870233

STANDARD DETAILS

SHEET 9 OF 14

WELDING NOTES

1. FOR ALUMINUM DUCT THICKNESS THRU .125" USE A SQUARE BUTT JOINT AND WELD FROM ONE SIDE ONLY.
2. FOR ALUMINUM DUCTS THICKER THAN .125" A SQUARE BUTT JOINT MAY BE USED IF BOTH SIDES CAN BE WELDED; OTHERWISE, BEVEL EDGES AS SHOWN IN DETAIL "A" AND WELD FROM BEVELED SIDE ONLY.

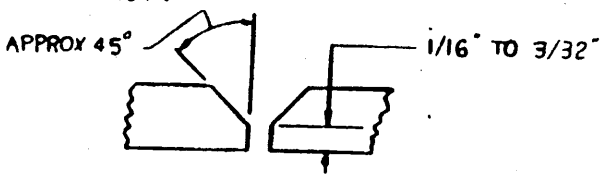

DETAIL "A"

FOR AL DUCTS THICKER THAN .125" & WELDED FROM BEVELED SIDE ONLY

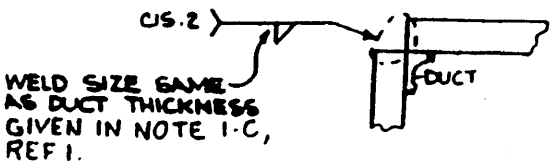

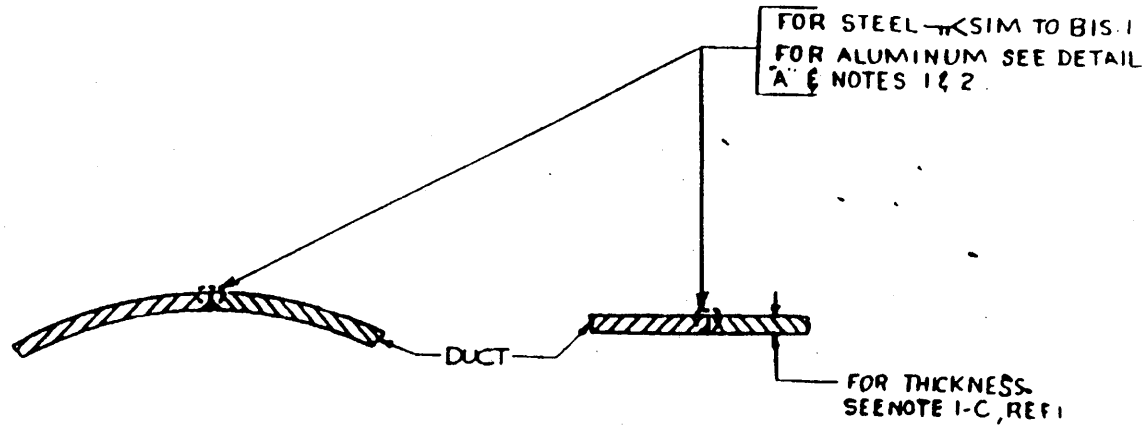

WELDED SEAMS & BUTT JOINTS FOR WELDED STEEL & ALUMINUM DUCTS

DETAIL 5

DWG NO. 501 — 4870233

STANDARD DETAILS

SHEET 10 OF 14

NOTES:

1. FLANGES AND GASKETS ARE NOT TO PROTRUDE INTO THE AIR STREAM. SEE NOTE 19-C, REF #1.
2. RIVET SPACING NOT TO EXCEED 2" CENTERS SEE NOTE 6-C, REF #1.

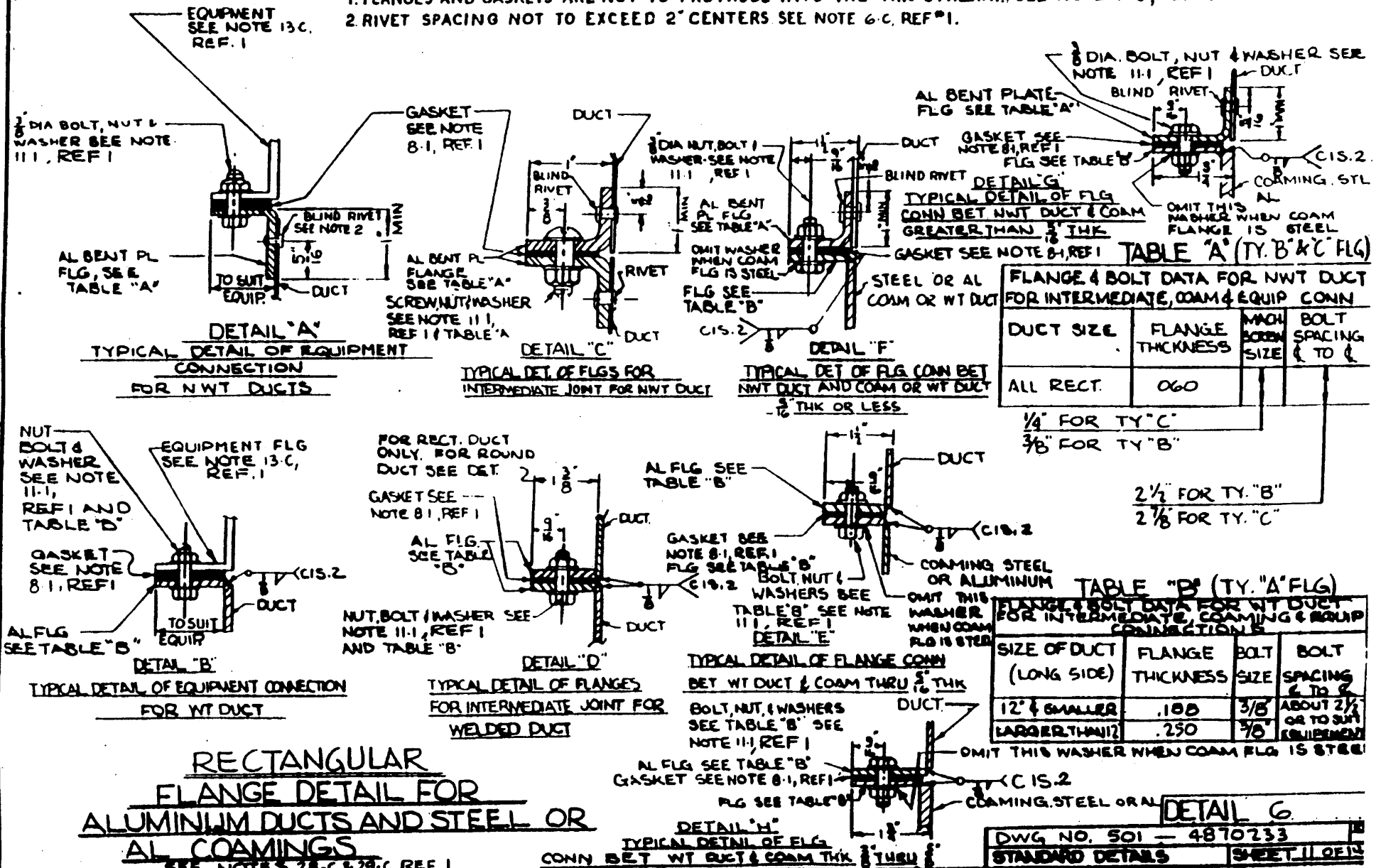

TABLE "A" (TY. "B" & "C" FLG)

FLANGE & BOLT DATA FOR NWT DUCT FOR INTERMEDIATE, COAM & EQUIP CONN

DUCT SIZE	FLANGE THICKNESS	MACH SCREW SIZE	BOLT SPACING ℄ TO ℄
ALL RECT.	.060		

1/4" FOR TY "C"
3/8" FOR TY "B"

2 1/2" FOR TY. "B"
2 7/8" FOR TY. "C"

TABLE "B" (TY. "A" FLG)

FLANGE & BOLT DATA FOR WT DUCT FOR INTERMEDIATE, COAMING & EQUIP CONNECTIONS

SIZE OF DUCT (LONG SIDE)	FLANGE THICKNESS	BOLT SIZE	BOLT SPACING ℄ TO ℄
12" & SMALLER	.188	3/8"	ABOUT 2 1/2 OR TO SUIT EQUIPMENT
LARGER THAN 12	.250	5/8"	

RECTANGULAR FLANGE DETAIL FOR ALUMINUM DUCTS AND STEEL OR AL COAMINGS

SEE NOTES 28-C & 29-C, REF 1

DETAIL 6

DWG NO. 501 — 4870233

STANDARD DETAILS | SHEET 11 OF 14

NOTES:

1. FLANGES AND GASKETS ARE NOT TO PROTRUDE INTO THE AIR STREAM. SEE NOTE 19-C, REF 7.
2. RIVET SPACING NOT TO EXCEED 2" CENTERS. SEE NOTE 6-C, REF 7.

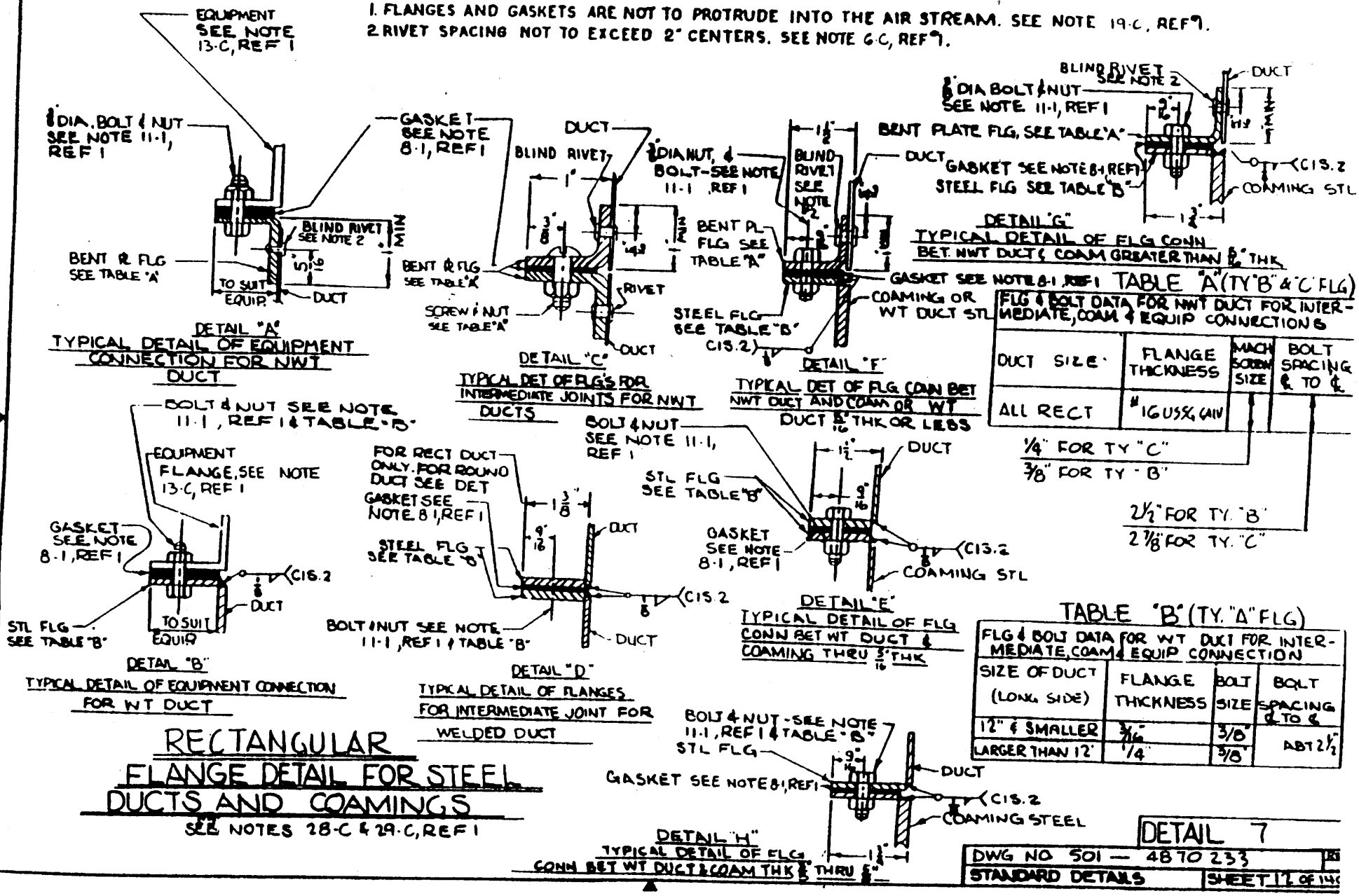

TABLE "A" (TY "B" & "C" FLG)

FLG & BOLT DATA FOR NWT DUCT FOR INTERMEDIATE, COAM & EQUIP CONNECTIONS

DUCT SIZE	FLANGE THICKNESS	MACH SCREW SIZE	BOLT SPACING ℄ TO ℄
ALL RECT	#16 USSG, GALV		

1/4" FOR TY "C"
3/8" FOR TY "B"

2 1/2" FOR TY "B"
2 7/8" FOR TY "C"

TABLE "B" (TY. "A" FLG)

FLG & BOLT DATA FOR WT DUCT FOR INTERMEDIATE, COAM & EQUIP CONNECTION

SIZE OF DUCT (LONG SIDE)	FLANGE THICKNESS	BOLT SIZE	BOLT SPACING ℄ TO ℄
12" & SMALLER	3/16"	3/8"	ABT 2 1/2"
LARGER THAN 12"	1/4"	5/8"	

RECTANGULAR FLANGE DETAIL FOR STEEL DUCTS AND COAMINGS

SEE NOTES 28-C & 29-C, REF 1

DETAIL 7

DWG NO 501 — 4870233

STANDARD DETAILS

SHEET 12 OF 14

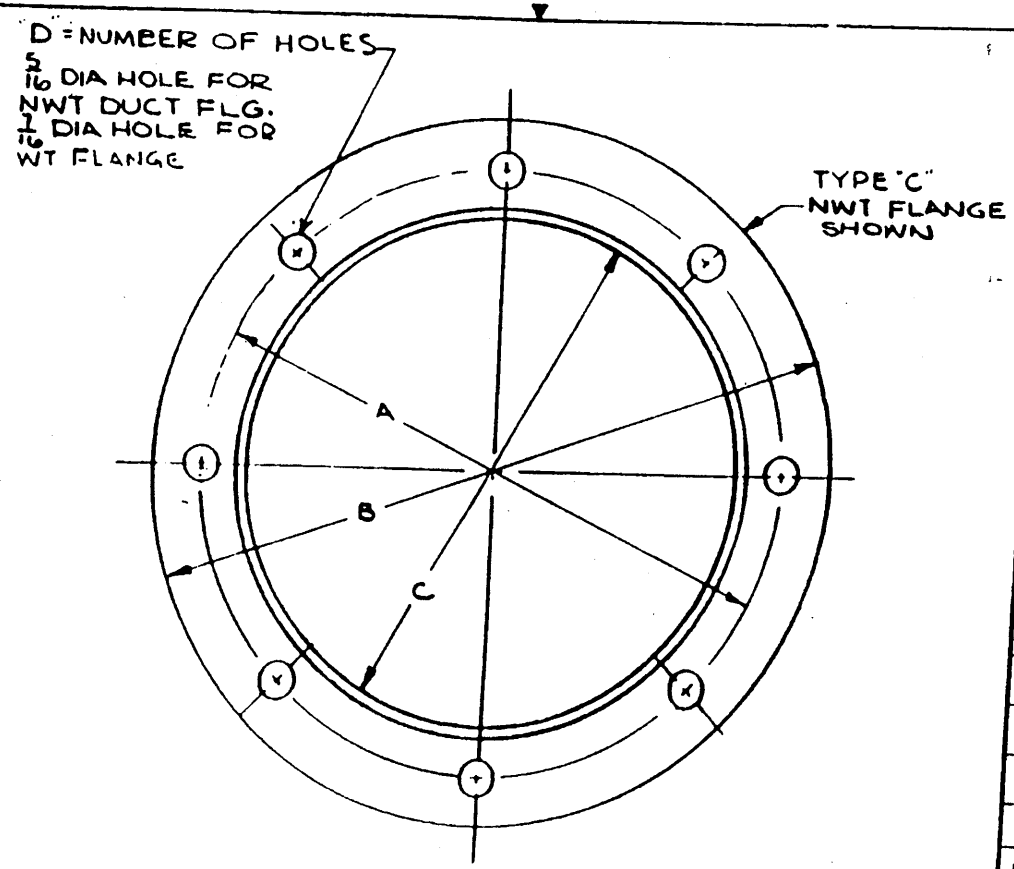

ROUND FLANGE FOR WT & NWT DUCT

TYPE "A". FLAT FLG FOR WT DUCT & COAMING
TYPE "B" PRESSED FLG FOR COMPANION USE AT END OF WT DUCT OR COAMING
TYPE "C". PRESSED FLG FOR NWT DUCT

TABLE OF SIZES

SIZE NOM.	TYPE "C" NWT A	B	C	D	TYPE "A" - WT A	B	C	D
3	4 3/16	5	3 3/16	6	4 11/16	5 3/4	3 3/4	8
3 1/2	4 11/16	5 1/2	3 11/16		5 3/16	6 1/4	3 3/4	10
4	5 3/16	6	4 3/16		5 11/16	6 3/4	4 1/4	
4 1/2	5 11/16	6 1/2	4 11/16	8	6 3/16	7 1/4	4 3/4	12
5	6 3/16	7	5 3/16		6 11/16	7 3/4	5 1/4	
5 1/2	6 11/16	7 1/2	5 11/16		7 3/16	8 1/4	5 3/4	14
6	7 3/16	8	6 3/16		7 11/16	8 3/4	6 1/4	
6 1/2	7 11/16	8 1/2	6 11/16	10	8 3/16	9 1/4	6 3/4	16
7	8 3/16	9	7 3/16		8 11/16	9 3/4	7 1/4	
7 1/2	8 11/16	9 1/2	7 11/16		9 3/16	10 1/4	7 3/4	18
8	9 3/16	10	8 3/16		9 11/16	10 3/4	8 1/4	
8 1/2	9 11/16	10 1/2	8 11/16		10 3/16	11 1/4	8 3/4	20
9	10 3/16	11	9 3/16	12	10 11/16	11 3/4	9 1/4	
9 1/2	—	—	—	—	11 3/16	12 1/4	9 3/4	22
10	11 3/8	12 1/8	10 1/4	12	11 11/16	12 3/4	10 1/4	24
10 1/2	—	—	—	—	12 3/16	13 1/4	10 3/4	
11	12 3/8	13 1/8	11 1/4	14	12 11/16	13 3/4	11 1/4	26
11 1/2	—	—	—	—	13 3/16	14 1/4	11 3/4	
12	13 3/8	14 1/8	12 1/4	14	13 11/16	14 3/4	12 1/4	28

NOTES:

1. MATERIAL FOR TYPE "A" FLANGES 10 DIA & ABOVE - 1/4 THK STL OR AL; 9 1/2 DIA & BELOW - 3/16 THK STL OR AL
2. MATERIAL FOR TY. "B" & "C" FLANGES - #16 USSG STL OR .06 AL.
3. INFORMATION SHOWN ON THIS DETAIL IS FOR STOCK FLANGE ONLY FLANGES LARGER THAN 12" DIA. SHALL BE FABRICATED IAW TABLE "B", DET. 6 OR 7.

DETAIL 8

DWG NO. 501 — 4870233

STANDARD DETAILS

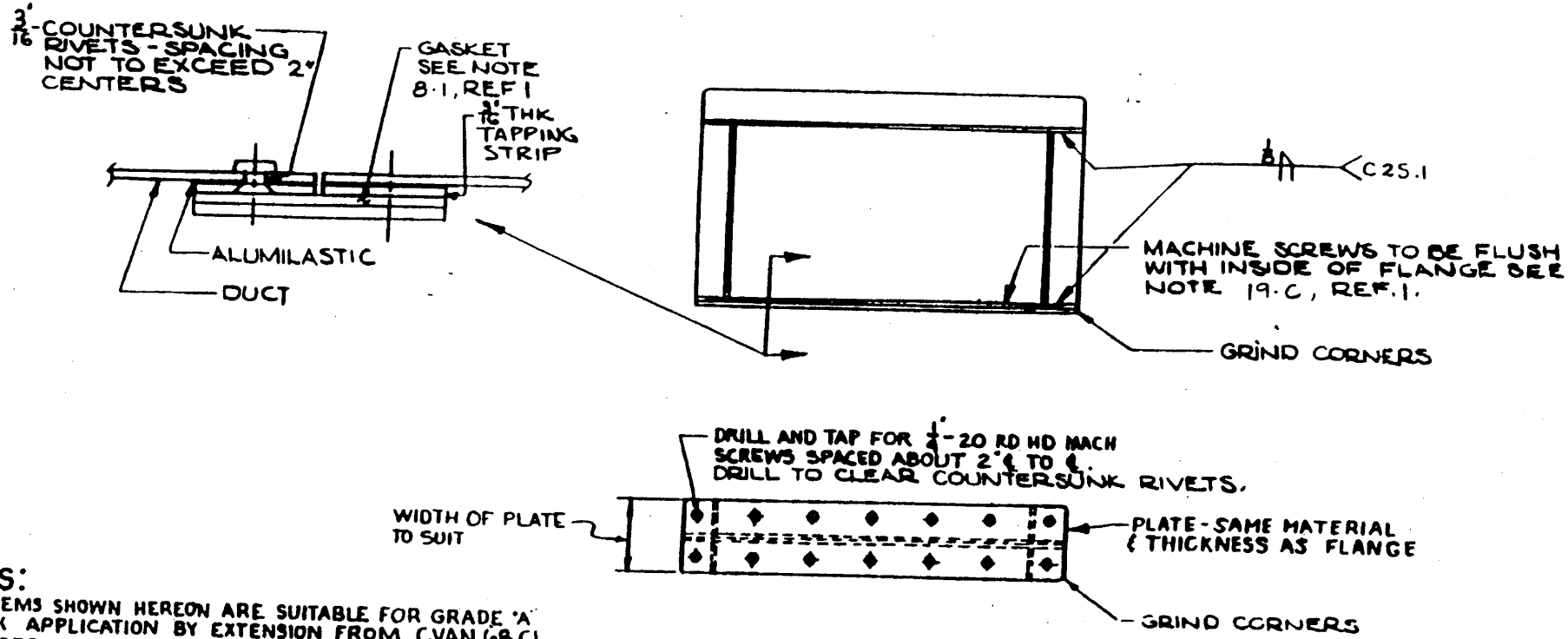

NOTES:

1. THE ITEMS SHOWN HEREON ARE SUITABLE FOR GRADE 'A' SHOCK APPLICATION BY EXTENSION FROM CVAN 68 CL AS APPROVED BY SUPSHIP N.N. LTR CVAN 68 CL/9380-1 SER 283 B-1517 DATED 5-21-71.

FLAT FLANGE CONNECTION FOR NWT STEEL DUCT

FOR INFORMATION NOT SHOWN SEE DETAIL 7

METHOD OF FLANGED CONNECTION TO GAIN HEAD ROOM SEE NOTE 2·1, REF. 1

DETAIL 9	
DWG NO. 501 — 4870233	
STANDARD DETAILS	SHEET 14 OF 14

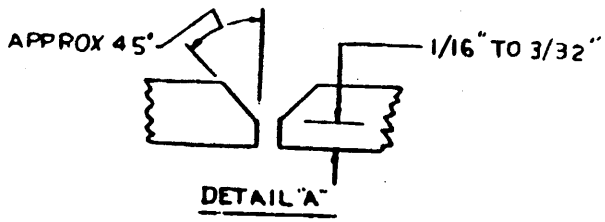

WELDING NOTES

1 FOR ALUMINUM DUCT THICKNESS THRU .125" USE A SQUARE BUTT JOINT AND WELD FROM ONE SIDE ONLY.

2 FOR ALUMINUM DUCTS THICKER THAN .125" A SQUARE BUTT JOINT MAY BE USED IF BOTH SIDES CAN BE WELDED; OTHERWISE, BEVEL EDGES AS SHOWN IN DETAIL "A" AND WELD FROM BEVELED SIDE ONLY

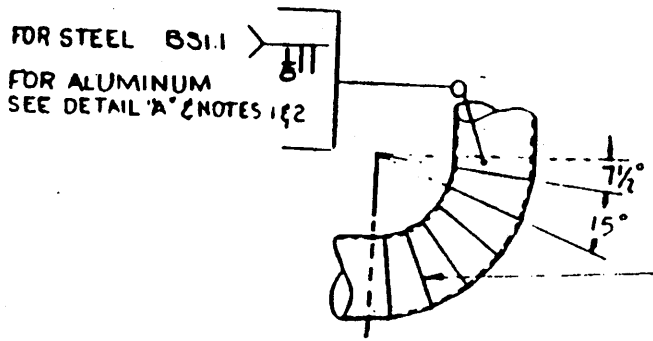

THE INTERIOR SURFACE AT WELD JOINT SHALL BE MADE SMOOTH BY GRINDING AND/OR CHIPPING IF NECESSARY.

ELBOW FOR ROUND WT DUCT

SEE NOTE 9-C, REF. 1

DETAIL 10	
DWG NO. 501 — 4870233	
STANDARD DETAILS	SHEET 15 OF 1[illegible]

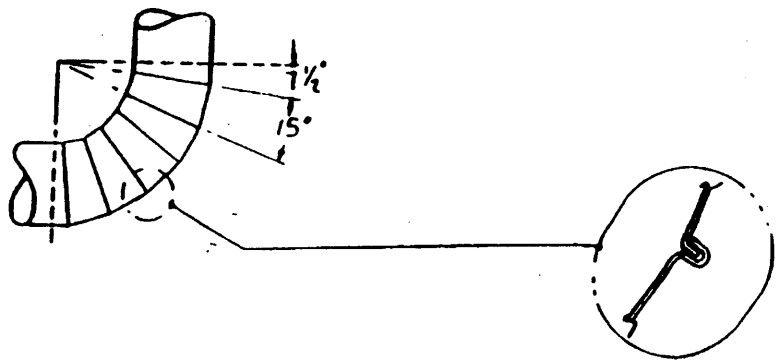

SECTIONS OF ELBOW USING .060, .050, .040 & .025 THK ALUMINUM AND #18, #21, #22 & #28 USSG STEEL ARE TO BE ROLL SEAMED. LONGITUDINAL SEAMS ARE TO BE RIVETED.

ELBOW FOR ROUND NWT DUCT

DETAIL 11

DWG. NO. 501 — 4870233

STANDARD DETAILS

SHEET 16 OF 145

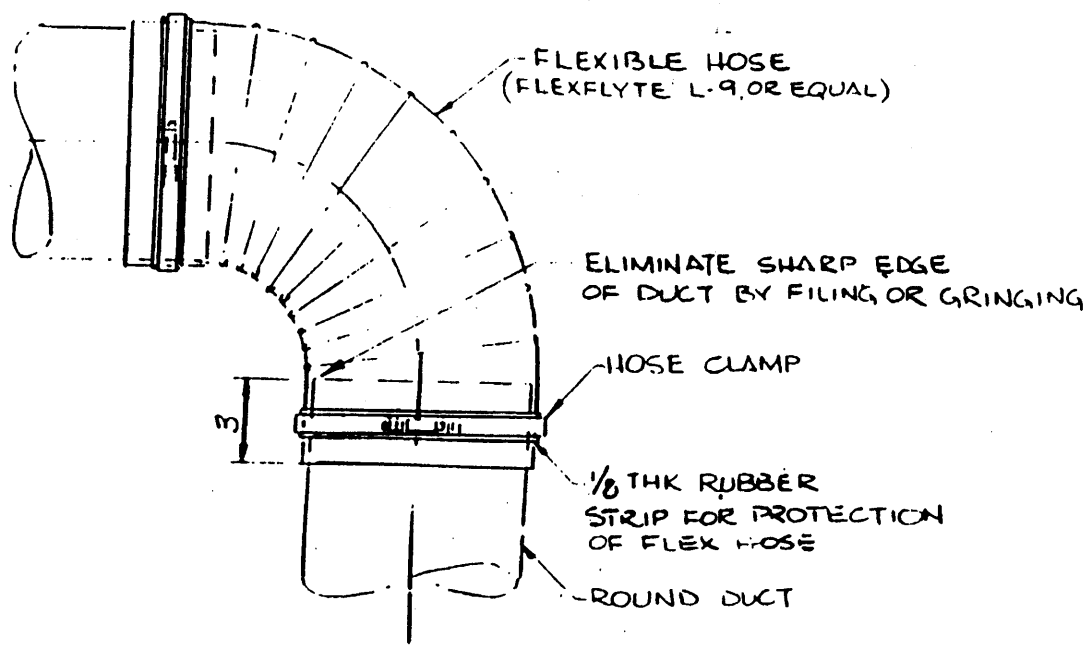

FLEXIBLE ELBOW FOR ROUND NWT DUCT

RECOMMENDED FOR 8" DIA & UNDER - SEE NOTE 26 I, REF. 1

DETAIL 12

DWG NO. 501 — 4870233

STANDARD DETAILS | SHEET 17 OF 14

WT DUCTS

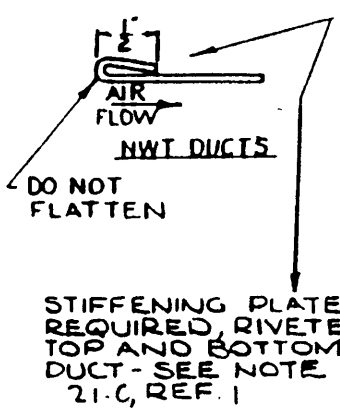

ALTERNATE METHOD

STIFFENING ANGLE AS REQUIRED, RIVET TO DUCT SEE NOTE 21-C, REF 1

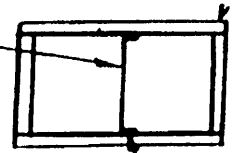

NWT DUCT

ALTERNATE METHOD

STIFFENING ANGLE AS REQUIRED, WELDED TO DUCT SEE NOTE 21-C, REF. 1

STIFFENING PLATE AS REQUIRED

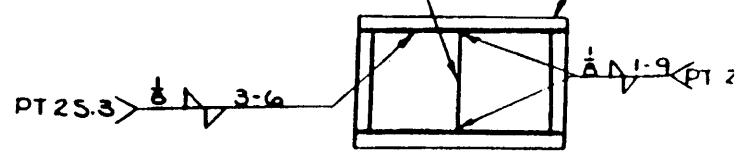

WELDED DUCT

STIFFENING PLATES AND ANGLES FOR LARGE DUCTS

DETAIL 13

DWG NO. 501 — 4870233

STANDARD DETAILS

SHEET 18 OF 14

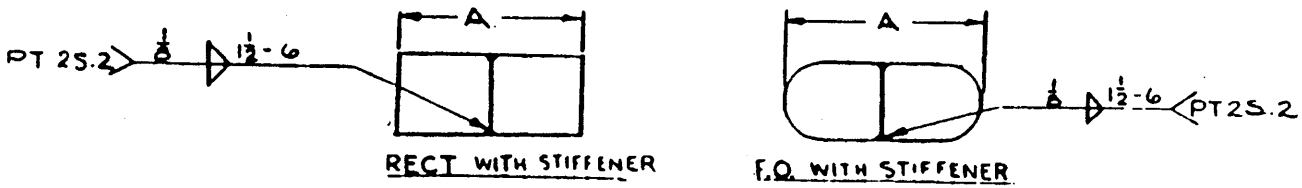

TABLE OF ALLOWANCES WITHOUT INTERNAL STIFFENING	
HYDROSTATIC HEAD (FT)	MAX. DUCT DIM (IN) UNSTIFFENED
8 AND LESS	33
8.5 TO 12	26
12.5 TO 18	21
18.5 TO 27	18
27.5 TO 36	15
36.5 TO 45	13
45.5 TO 60	12

WHEN THE LARGEST DUCT SIDE ("A") IS GREATER THAN THE MAXIMUM UNSTIFFENED DUCT DIMENSION FOR THE HYDROSTATIC HEAD SHOWN IN "TABLE OF ALLOWANCES", A STIFFENER WILL BE ADDED ON THE DUCT CENTERLINE. THE LARGEST DIMENSION OF EACH HALF OF THE DUCT MUST BE LESS THAN THE ALLOWABLE DIMENSION LISTED IN THE TABLE

STIFFENER IS TO BE THE SAME THICKNESS AND TYPE OF MATERIAL AS THE DUCT & CONTINUOUS FOR THE LENGTH OF THE DUCT.

INTERNAL DUCT STIFFENING FOR TEST HEAD PRESSURE

WATERTIGHT VENTILATION DUCT BELOW THE TEST HEAD

DETAIL 14

DWG NO. 501 — 4870233 REV

STANDARD DETAILS SHEET 19 OF 140

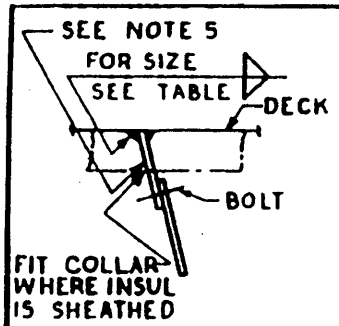

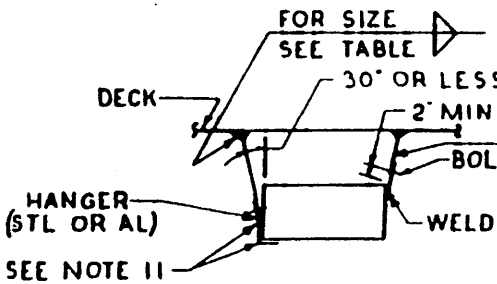

FOR WT & NWT DUCTS RECT

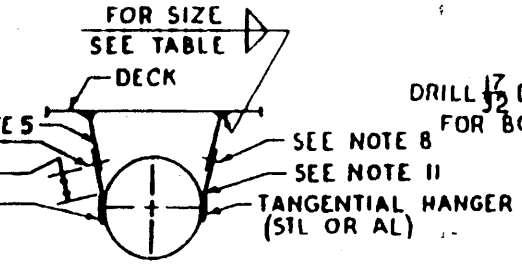

FOR ALL WT & NWT ROUND & F.O. DUCTS

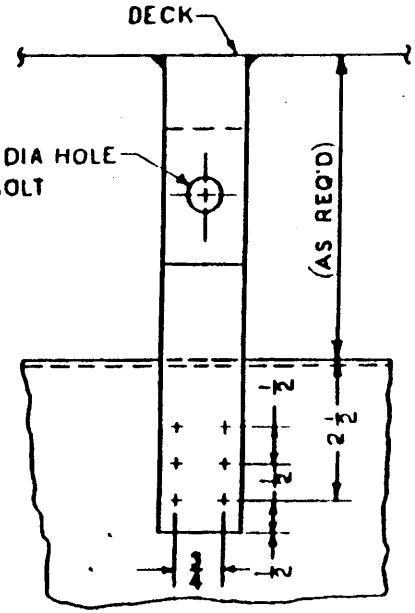

DETAIL-HANGER #1

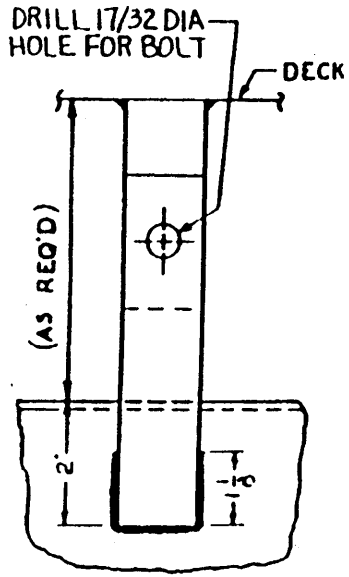

DETAIL-HANGER #3

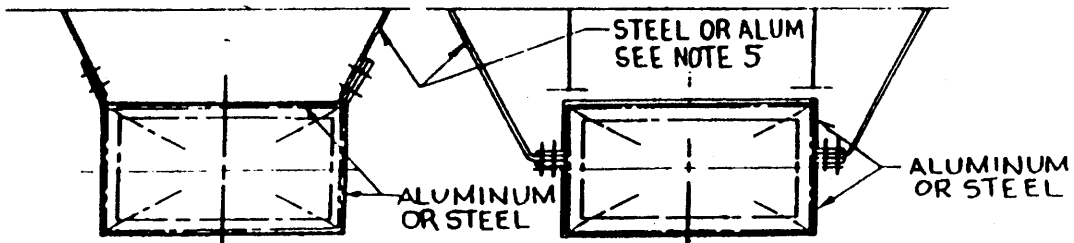

FOR RECTANGULAR DUCTS

ALTERNATE
FOR RECTANGULAR DUCTS NEAR STRUCTURE OR FOR DUCTS USED AS A PORTABLE SECTION

DETAIL-HANGER #2

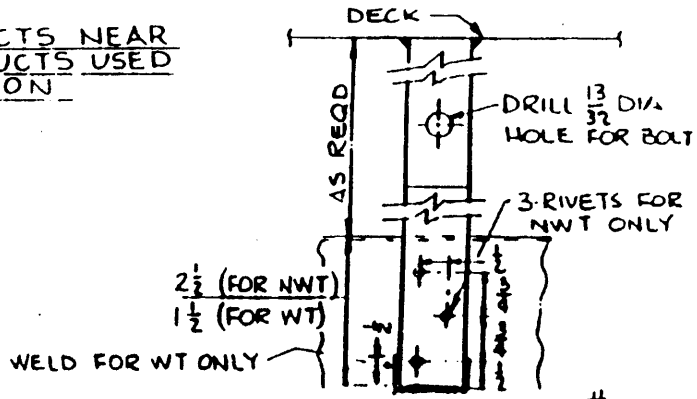

DETAIL-HANGER #4

HANGERS FOR GRADE "A" SHOCK DUCTWORK

SEE NOTE 10-1, REF. 1

* FOR NOTES & TABLE SEE DETAIL 16, SHT 21.
FOR IMFORMATION NOT GIVEN, SEE TABLE.

DETAIL 15

DWG NO. 501 — 4870233	REV
STANDARD DETAILS	SH 20 OF 140

NOTES:

1. WHERE WT DUCTWORK IS NOT PORTABLE HANGERS WILL BE ONE PIECE WITHOUT BOLTS.

2. CONTACT SURFACE BETWEEN ALUMINUM AND STEEL SHALL BE TREATED IN ACCORDANCE WITH NOTE 15-1 ON REF. 1.

3. WELDING TO BE IN ACCORDANCE WITH NAVSHIPS INSTR NO. 0900-000-1000

4. HANGERS NO 1 THRU 4 SHALL BE USED AS FOLLOWS:
   HANGER #1 - ALL NWT F.O. & RECT DUCTS AND NWT ROUND OVER 12" DIA.
   HANGER #2 ALL NWT DUCTS INTERNALLY SOUND INSULATED.
   HANGER #3 - ALL WT DUCTS EXCEPT ROUND THRU 6" DIA
   HANGER #4 ALL WT ROUND DUCTS THRU 6" DIA AND ALL NWT ROUND DUCTS THRU 12" DIA.

5. HANGER STOOL SHALL BE STEEL TO MIL-S-22698, WHEN ATTACHING TO STEEL STRUCTURE, AND ALUMINUM ALLOY 5456 QQ-A-200/7 WHEN ATTACHING TO ALUMINUM STRUCTURE.

6. IF ANGLES ARE USED IN LIEU OF FLATBAR THE LEG OF THE ANGLE CONNECTED TO THE DUCT SHALL BE EQUAL TO THE WIDTH AND THICKNESS OF THE FLATBAR GIVEN IN THE TABLE.

7. STEEL DUCT HANGERS SHALL BE OF STEEL TO MIL-S-22698; SEE NOTE 10 FOR AL.

8. FOR BOLTING, SEE NOTE 11-1, SUBPARAGRAPHS A, B, & D OF REF. 1.

9. RIVET HOLES IN DUCT ARE NOT TO BE DRILLED OVERSIZE. USE A #11 DRILL.

10. AL DUCT HANGERS ARE TO BE MADE OF ALLOY 5456, QQ-A-200/7, H111.

11. BENDING RADIUS OF HANGER FLATBAR IS TO BE THE SAME AS THE HANGER THICKNESS.

12. NWT DUCTWORK SHALL BE ATTACHED TO HANGER NO 1 USING 3/16 HUCK "BOM" FASTENER, OR EQUAL

13. THE HANGERS SHOWN HEREON ARE SUITABLE FOR GRADE "A" SHOCK APPLICATIC BY EXTENSION FROM VENTILATION DUCTWORK AND HANGER TESTS INDICATED ON SHENANDOAH LAB TEST REPORTS C-197, C-216, C-218, &C-2 AND LOCKHEED ELECTRONICS INCORPORATED TEST REPORT 3110-A-3033 AS APPROVED BY SUPSHIP N.N. LETTER DLGN 38 CL/9400-1 SER 2B3-3888 OF 21 NOV. 1973.

HANGER DIMENSIONS

HGR NO	HANGER FLATBAR SIZE	STOOL FLATBAR SIZE	NO OF RIVETS		RIVET SIZE	NO OF BOLTS	BOLT SIZE	WELD SIZE & LENGTH ON DUCT		WELD SIZE & LENGTH ON DE
1	$1\frac{1}{4} \times \frac{3}{16}$	$1\frac{1}{4} \times \frac{3}{16}$	6		SEE NOTE 12	1	$\frac{1}{2}$	—		3/16 AROU
2	↓	↓	—		—	2	$\frac{1}{2}$	—		
3	$1\frac{1}{4} \times \frac{3}{16}$	SEE NOTE 1	—		—	1	$\frac{1}{2}$	$\frac{1}{8}$-$3\frac{1}{2}$		
4	$1 \times \frac{1}{8}$	$1 \times \frac{1}{8}$	NWT 3	WT —	SEE NOTE 12	1	$\frac{3}{8}$	NWT —	WT $\frac{1}{8}$-2	$\frac{1}{8}$ A AROU

HANGERS FOR GRADE "A" SHOCK DUCTWOR

(NOTES AND TABLE CONT'D FROM DETAIL 15)

DETAIL 16

DWG NO. 501 — 4870233

STANDARD DETAILS

SH 21 OF 140

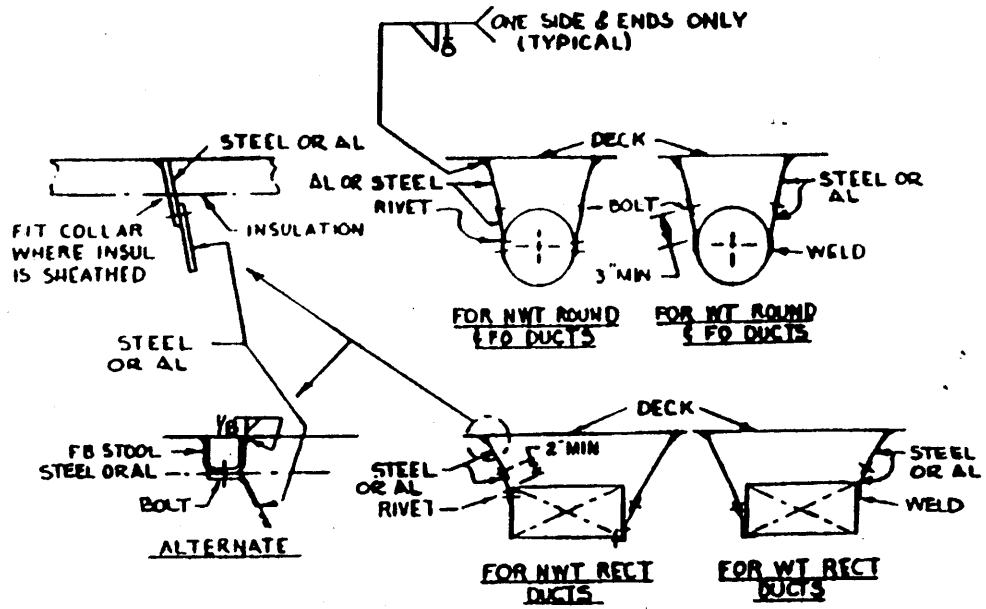

NO	DUCT SIZE	HANGER SIZE
1	UP TO 10"	1" x [illegible]
2	10½" TO 24"	1½" x [illegible]
3	OVER 24"	2" x [illegible]
Nº 1 & 2 - [illegible]" BOLTS		
Nº 3 - [illegible] BOLTS		

NOTES:
(1) HANGERS MAY BE MODIFIED IF NECESSARY TO SUIT WORK ON THE SHIP
(2) WELDING SHALL BE IN ACCORDANCE WITH CURRENT SHOP PROCEDURES 11.1

HANGERS FOR GRADE "C" SHOCK DUCTWORK
(SEE NOTE 10-1, REF 1)

DETAIL 17

DWG NO. 501 — 4870233

STANDARD DETAILS

SHEET 22 OF 14

WELDING NOTES

1. FOR ALUMINUM DUCT THICKNESS THRU .125" USE A SQUARE BUTT JOINT & WELD FROM ONE SIDE ONLY.
2. FOR ALUMINUM DUCTS THICKER THAN .125" A SQUAR BUTT JOINT MAY BE USED IF BOTH SIDES CAN BE WELDED; OTHERWISE, BEVEL EDGES AS SHOWN IN DETAIL "A" AND WELD FROM BEVELED SIDE ON

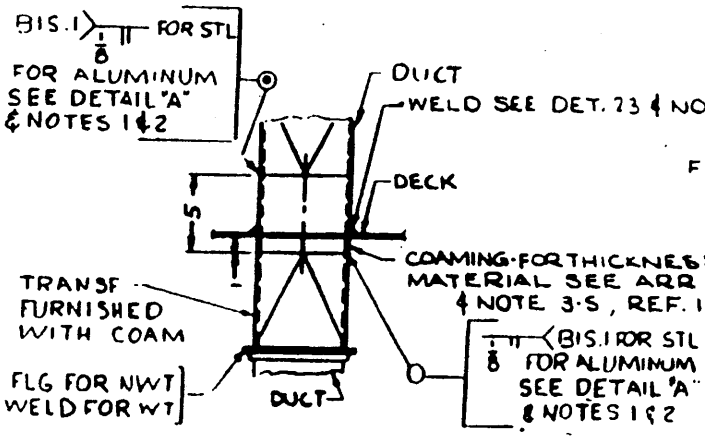

TYPICAL DUCT CONNECTION TO STEEL OR ALUMINUM FD, RC, OR ROUND COAMING WHEN A TRANSFORMATION IS REQUIRED

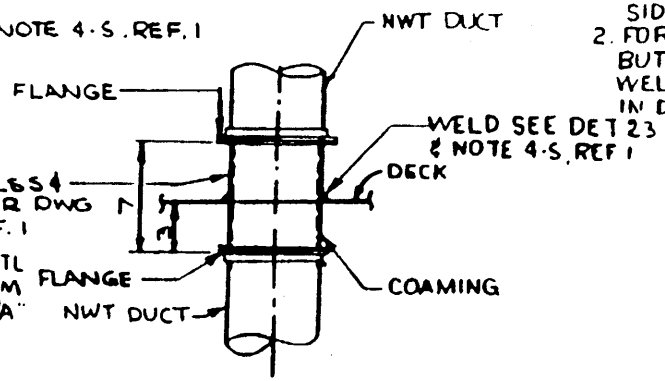

TYPICAL NWT DUCT CONN TO ROUND STEEL OR AL COAMING THRU DK

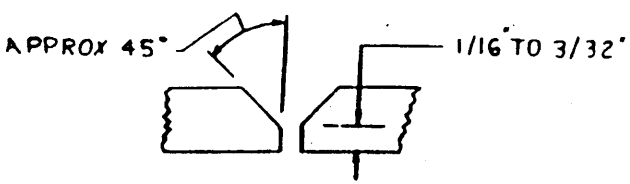

DETAIL "A"

FOR AL DUCTS THICKER THAN .125" & WELDED FROM BEVELED SIDE ONLY

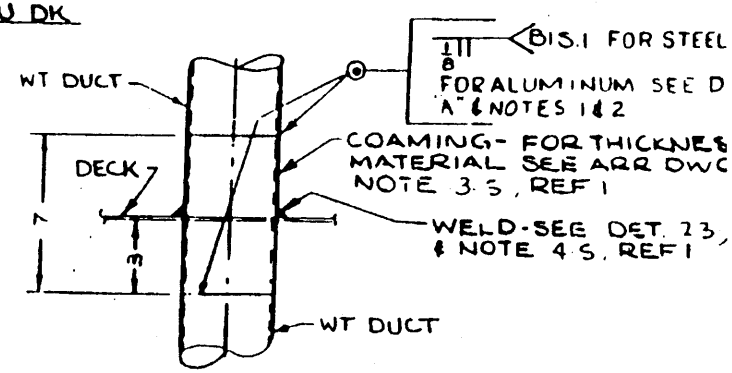

TYPICAL WT DUCT CONN TO ROUND STEEL OR AL COAMING THRU DECK.

COAMINGS THROUGH STEEL OR AL DECKS TYPICAL

SEE NOTES 3-S, 4-S & 6-S, REF. 1

DETAIL 18

DWG NO. 501 — 4870233

STANDARD DETAILS | SHEET 23 OF 14

WELDING NOTES

1. FOR ALUMINUM DUCTS THICKER THAN .125, USE A SQUARE BUTT JOINT AND WELD FROM ONE SIDE ONLY.
2. FOR ALUMINUM DUCTS THICKER THAN .125, A SQUARE BUTT JOINT MAY BE USED IF BOTH SIDES CAN BE WELDED. OTHERWISE BEVEL EDGES AS SHOWN IN DETAIL "A" AND WELD FROM BEVELED SIDE ONLY

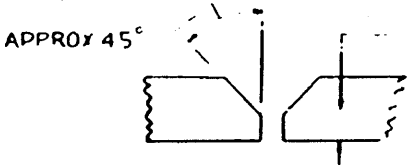

DETAIL A

FOR AL DUCTS THICKER THAN .125" & WELDED FROM BEVELED SIDE ONLY

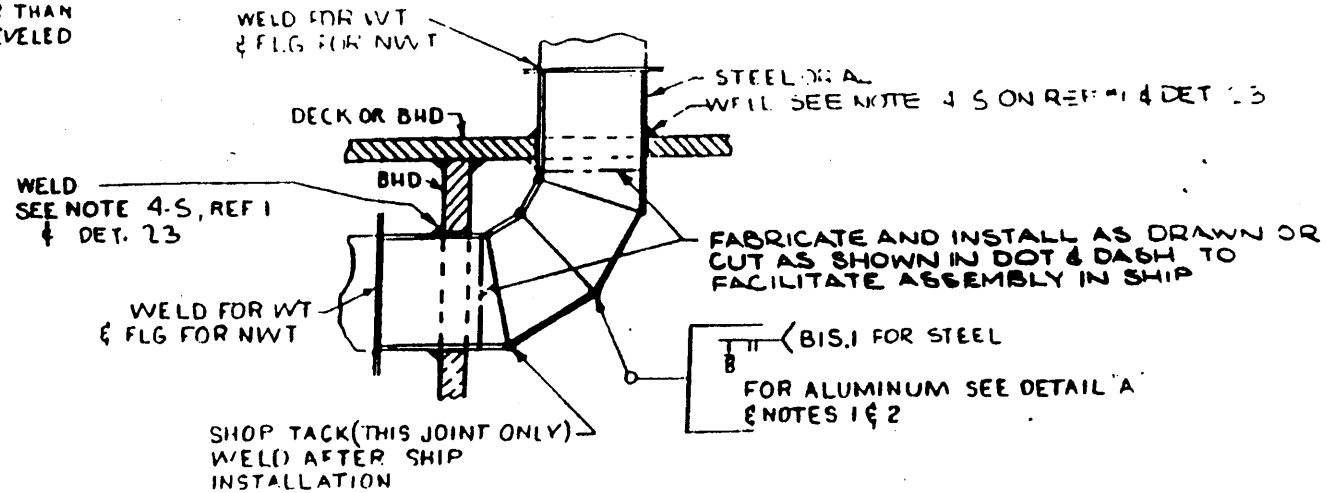

ROUND OR FO COAMING & ELBOW THRU DK AND BULKHEAD WHERE SPACE IS LIMITED

SEE NOTES 3-S, 4-S & 6-S, REF. 1

DETAIL 19	
DWG NO 531 - 4870233	
STANDARD DETAILS	SHEET 24 OF 14

WELDING NOTES

1. FOR ALUMINUM DUCT THICKNESS THRU 0.125" USE A SQUARE BUTT JOINT AND WELD FROM ONE SIDE ONLY.
2. FOR ALUMINUM DUCTS THICKER THAN 0.125" A SQUARE BUTT JOINT MAY BE USED IF BOTH SIDES CAN BE WELDED; OTHERWISE, BEVEL EDGES AS SHOWN IN DETAIL "A" AND WELD FROM BEVELED SIDE ONLY.

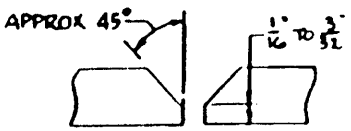

DETAIL "A"

FOR AL DUCTS THICKER THAN 0.125" & WELDED FROM BEVELED SIDE ONLY.

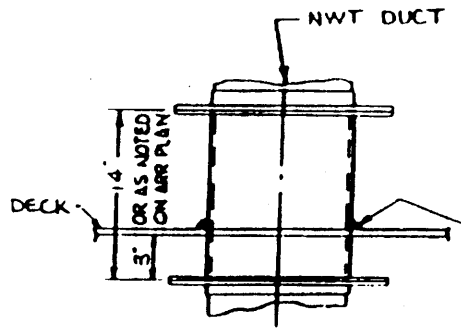

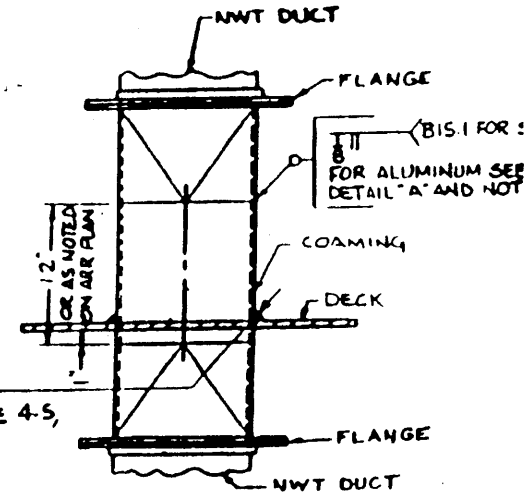

TYPICAL DETAIL OF COAMING WITH WELDED TRANSITION

COAMINGS THRU DECKS IN SPACES REQUIRING LIQUID SPILLAGE PROTECTION

SEE NOTES 3-S, 4-S & 6-S, REF 1

DETAIL 20

DWG. NO. 501 — 4870233

STANDARD DETAILS | SHEET 25 OF

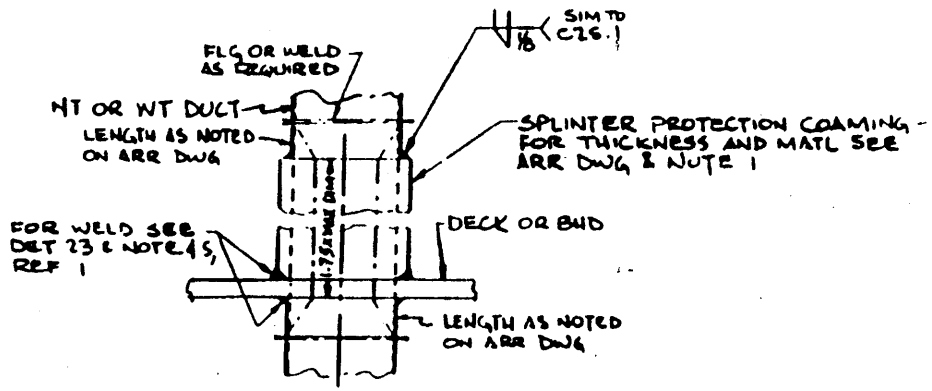

ALTERNATE

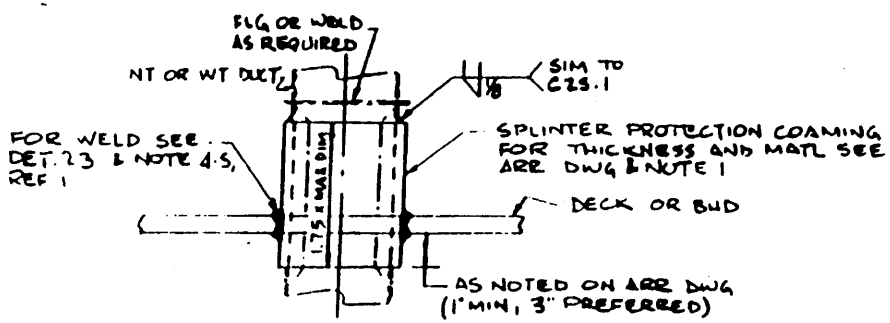

PREFERRED

NOTE 1. MATERIAL THICKNESS FOR BALLISTIC COAMINGS SHALL BE FOLLOWS:

(A) FOR PLATING HEAVIER THAN 40#/SQ FT — THICKNESS SH BE 1/2 THE PLATING PENETR BUT NOT LESS THAN 30#/S

(B) FOR PLATING 20 TO 40#/SQ THICKNESS SHALL BE 1/ THE PLATING PENETRAT BUT NOT LESS THAN 15#/S

(C) MAX LENGTH OF BALLISTIC COAM IS 48 INCHES

COAMINGS THRU BALLISTIC DECKS OR BHDS

FOR DUCTS OVER 12" DIA OR EQUIVALENT NON-CIRCULAR OPNGS, EXCEPT AIRCRAFT CARRIER HANGAR DK OPNGS 8" DIA & LARGER SHALL HAVE BALLISTIC SLEEVES PROVIDED. FOR PENETRATIONS OF SHELL PLATING NOT IN WAY OF SPONSONS REFER TO GEN. SPECS

DETAIL 21	
DWG NO. 501 — 4870233	
STANDARD DETAILS	SHEET 26 OF 1

WELDING NOTES

1 FOR ALUMINUM DUCT THICKNESS THRU .125" USE A SQUARE BUTT JOINT AND WELD FROM ONE SIDE ONLY

2 FOR ALUMINUM DUCTS THICKER THAN .125" A SQUAR BUTT JOINT MAY BE USED IF BOTH SIDES CAN BE WEL OTHERWISE, BEVEL EDGES AS SHOWN IN DETAIL "A AND WELD FROM BEVELED SIDE ONLY.

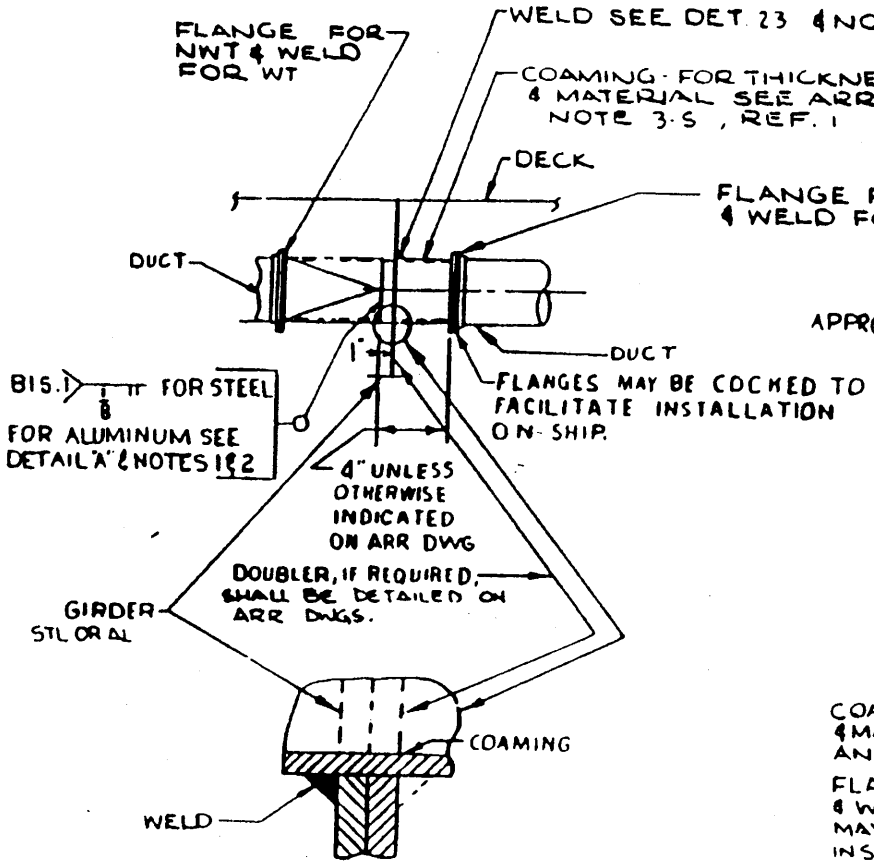

TYPICAL DETAIL OF NWT OR WT DUCT CONN TO STEEL OR AL COAM USED AS REINFORCEMENT THROUGH GIRDER

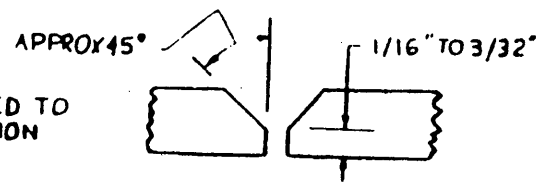

DETAIL "A"
FOR AL DUCTS THICKER THAN .125" & WELDED FROM BEVELED SIDE ONLY

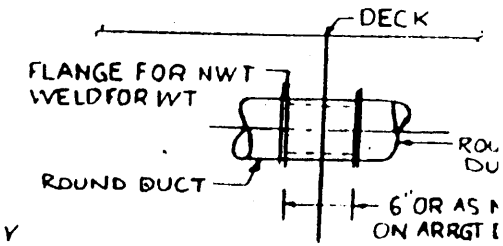

TYPICAL NWT OR WT CONN TO ROUND STEEL OR AL COAMING THROUGH BHD

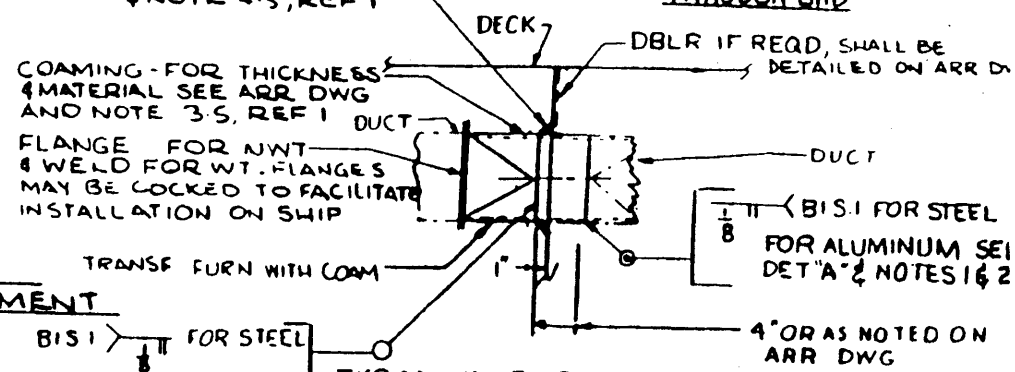

TYPICAL NWT OR WT DUCT CONN TO STEEL OR AL FO, RC OR ROUND COAMING THRU BHD WHEN A TRANSFORMATION IS REQ'D

COAMINGS THROUGH STEEL OR AL BULKHEADS & GIRDERS TYPICAL

(SEE NOTES 3-S, 4-S & 6-S, REF 1)

DETAIL 2

DWG NO. 501 — 4870233

STANDARD DETAILS | SHEET 27 OF 14

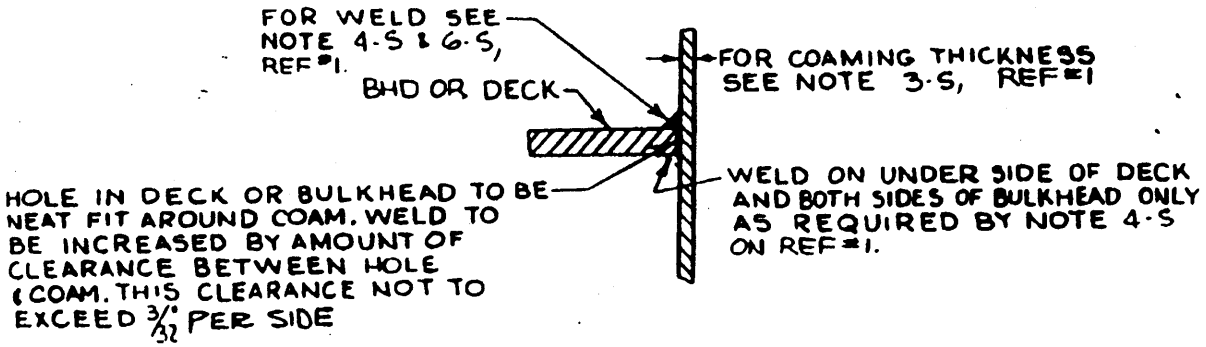

HOLE CUT & WELDING

INFORMATION FOR STL & AL COAMINGS

DETAIL 23

STANDARD DETAILS | SHEET 2B OF 14

NOTES:

1. FOR COAMING SIZE, LENGTH, THICKNESS & MATERIAL SEE ARRANGEMENT PLAN & NOTE 3-5, REF 1.

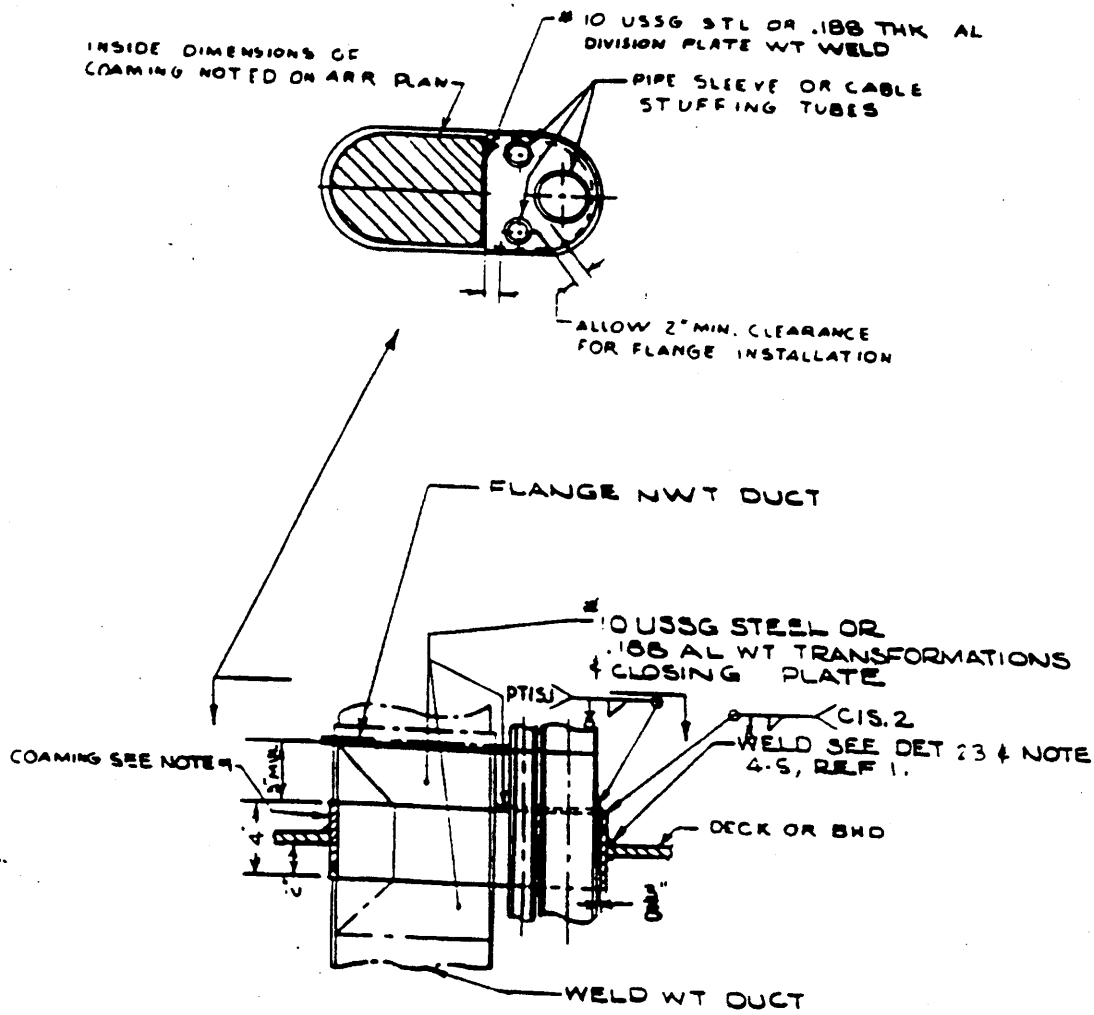

COMBINATION COAMING

DETAIL 2

DWG. NO. 501 — 4870233

STANDARD DETAILS

SHEET 29 OF

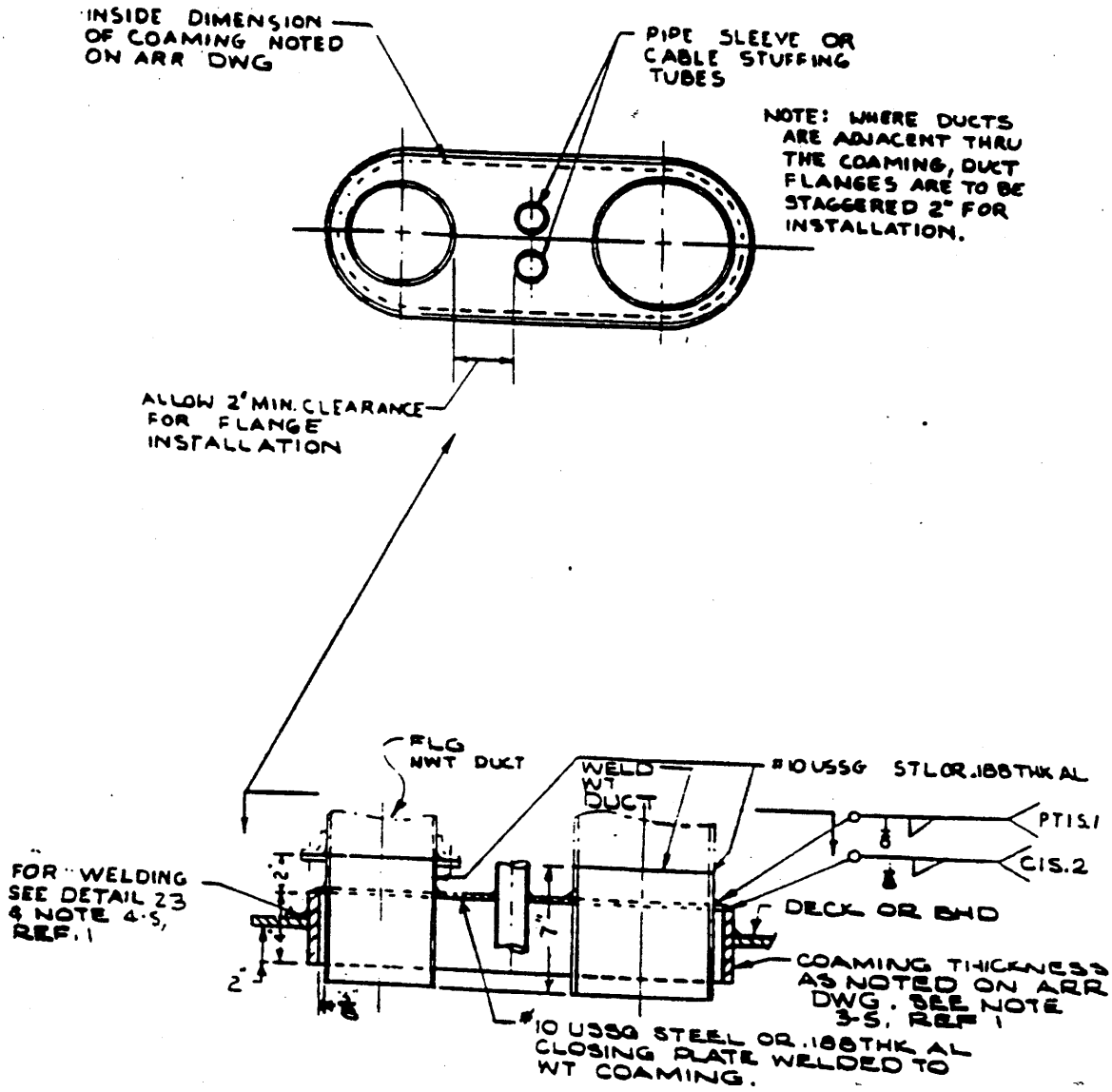

ALTERNATE COMBINATION COAMING

SEE NOTE 4-5, REF 1

DETAIL 25

DWG. NO. 501 — 4870233

STANDARD DETAILS

SHEET 30 OF 14

NOTES:

1. WHERE THIS DIMENSION IS EXCEEDED USE COLLAR.
2. THE ITEMS SHOWN HEREON ARE SUITABLE FOR GRADE 'A' SHOCK APPLICATION BY EXTENSION FROM DLGN 36 CLASS AS APPROVED BY SUPSHIP N.N. LTR DLGN 36 CL/9400-1, SER 283B-3332 DATED 11-18-71.

TERMINAL SIZE		BOX SIZE		CFM	
A	B	C	D	MIN	MAX
6	6	8	4	75	150
6	9	11	5	155	225
9	6	12	5	155	225
12	6	14	5	230	300
6	12	14	5	230	300
9	9	16	5	230	300
9	12	20	6	305	410
12	9	20	6	305	410
12	12	20	7	415	460
12	15	24	8	465	620
15	15	26	9	625	750

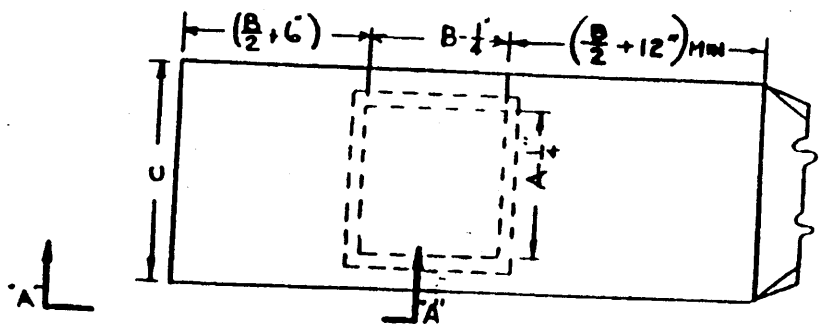

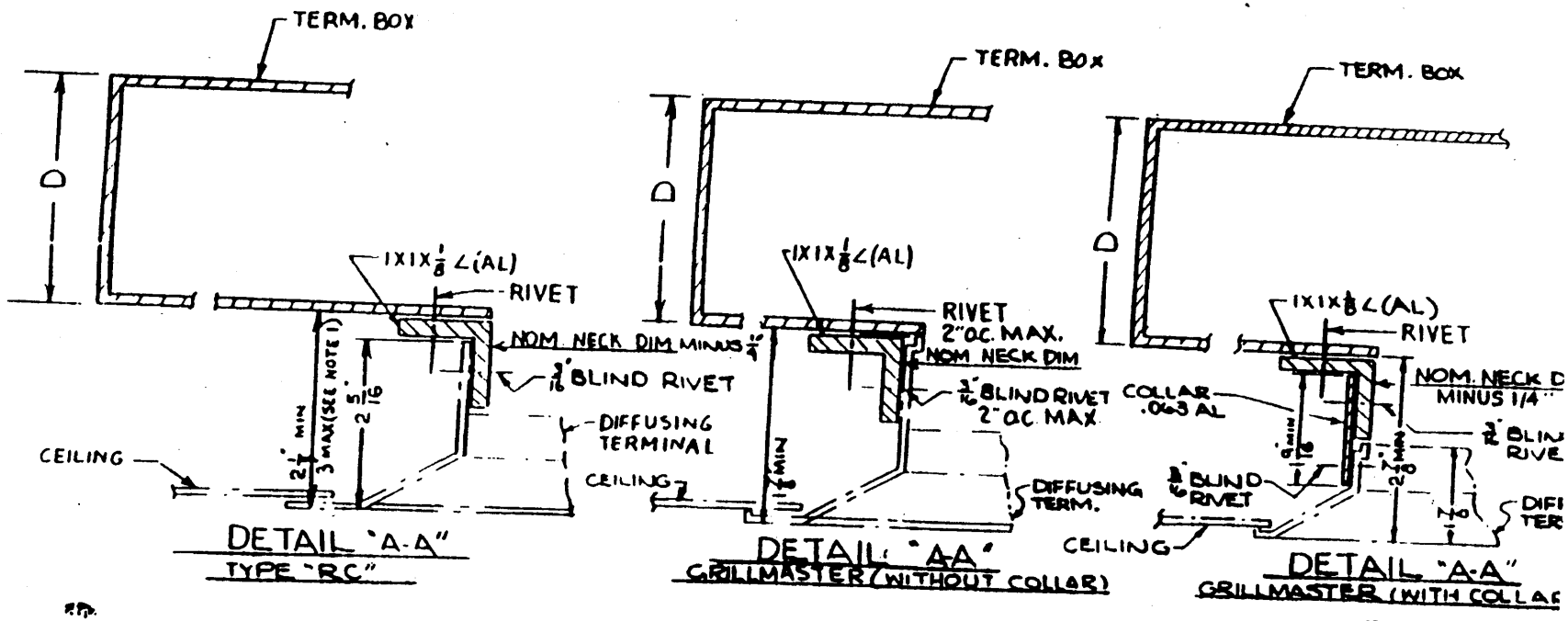

TERMINAL BOX FOR RECTANGULAR DIFFUSER

DETAIL 26

DWG NO. 501 — 4870233

STANDARD DETAILS

SHEET 31 OF

"T"	TERM DIA.	A	B	C	D	E MIN		CFM ASC MIN	CFM ASC MAX	CFM BDCE MIN	CFM BDCE MAX
9 1/8	4	7	2	6	4 7/16	16		75	140	75	150
10	5	7	3	7	4 7/8	18		145	190	155	205
13 1/2	6	8	4	8	5 1/16	18		195	275	210	305
14 1/8	7	9	5	9	5 11/16	20		280	350	310	420
17 3/8	8	11	5	10	5 7/8	20		355	420	425	530
17 3/4	9	12	6	11	6 9/16	22		425	495	535	655
20 5/8	10	15	6	12	6 3/4	22		500	550	660	770
24 1/4	12	18	7	14	7 9/16	24		555	780	775	1000

← NOISE CATEGORY

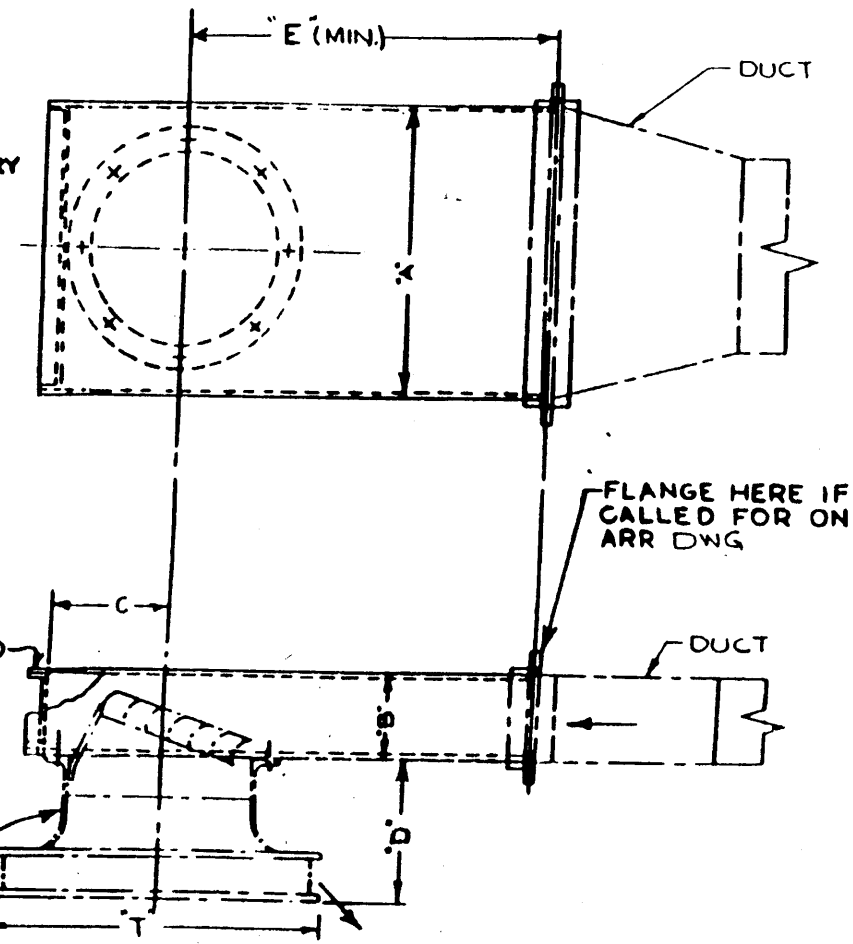

NOTES:

(1) THE TERMINAL BOX TO BE SUPPORTED BY HANGER AS NEAR TO TERMINAL AS POSSIBLE.

(2) USE DIMENSIONS IN TABLE EXCEPT WHERE DIMENSIONED OTHERWISE ON ARRANGEMENT DWG.

(3) THE ITEMS SHOWN HEREON ARE SUITABLE FOR GRADE "A" SHOCK APPLICATION BY EXTENSION FROM THE DIFFUSING TERMINAL TESTED AS DESCRIBED IN NN TEST REPORT 8973-9 AND APPD BY SUPSHIP LTR CVAN 68CL/9380/9400-1 SER 283A-724 DATED MARCH 16, 1970. NAVAL APPROVAL OF EXTENSION IS SUPSHIP LTR DLGN 38CL/9400-1 SER 283A-2203 DATED JULY 7, 1972

TERMINAL BOX FOR NAVY DIFFUSER

"A" SUITABLE FOR GRADE "A" SHOCK

DETAIL 27

DWG. NO. 501 — 4870233

STANDARD DETAILS | SHEET 32 OF 1

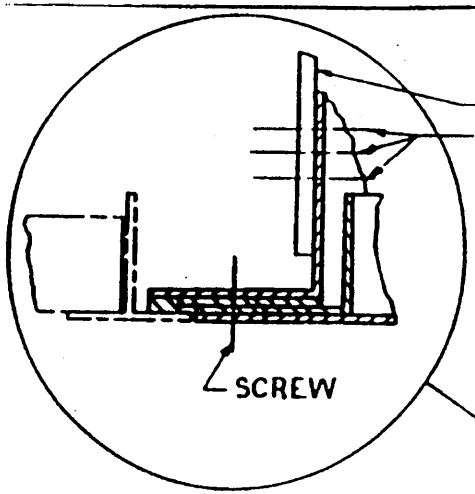

EXPLODED VIEW(TYP)

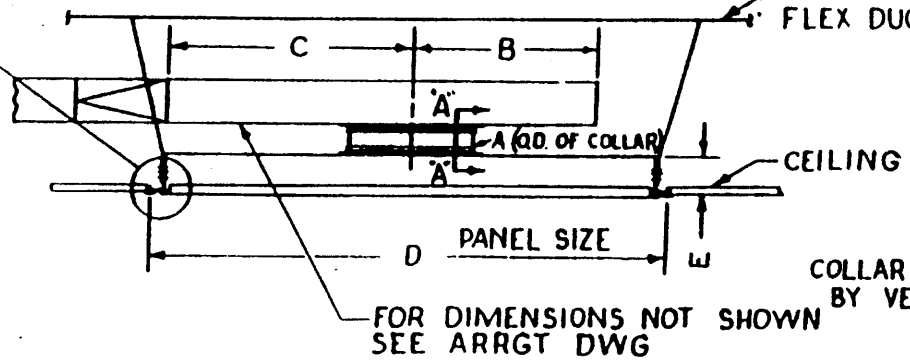

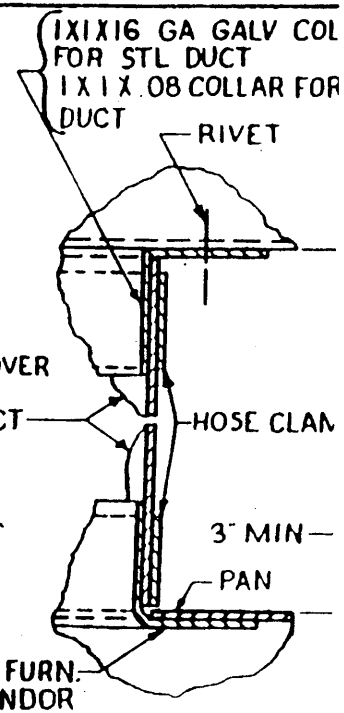

SECTION 'A-A'

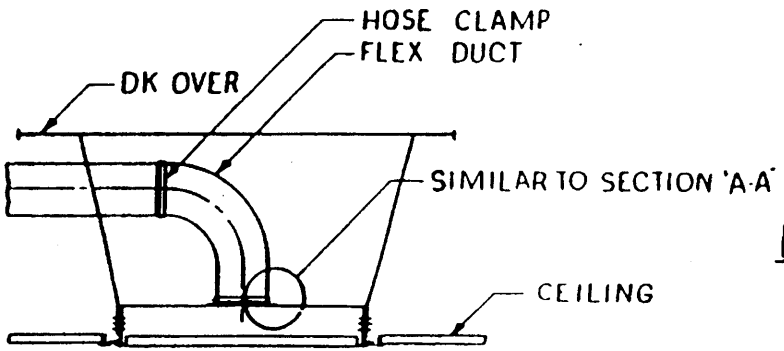

MULTIVENT TERMINAL MOUNTING DETAILS

MAX CFM IN VENTILATED SPACES	CFM MIN	CFM MAX	MULTI-VENT Nº.	Nº OF HANGERS	A	B	C	D	E
———	100	140	MVAT 200-5	4	5"	11	17	24X12	1-3/4
———	145	195	MVAT 200-7	4	7"	13	19	24X12	1-3/4
1000	355	600	MVAT 400	4	12"	18	24	48X24	3-1/2
500	200	350	MVAT 402	4	7"	13	19	24X24	3-1/2

DETAIL 28

DWG NO. 501 — 4870233

STANDARD DETAILS

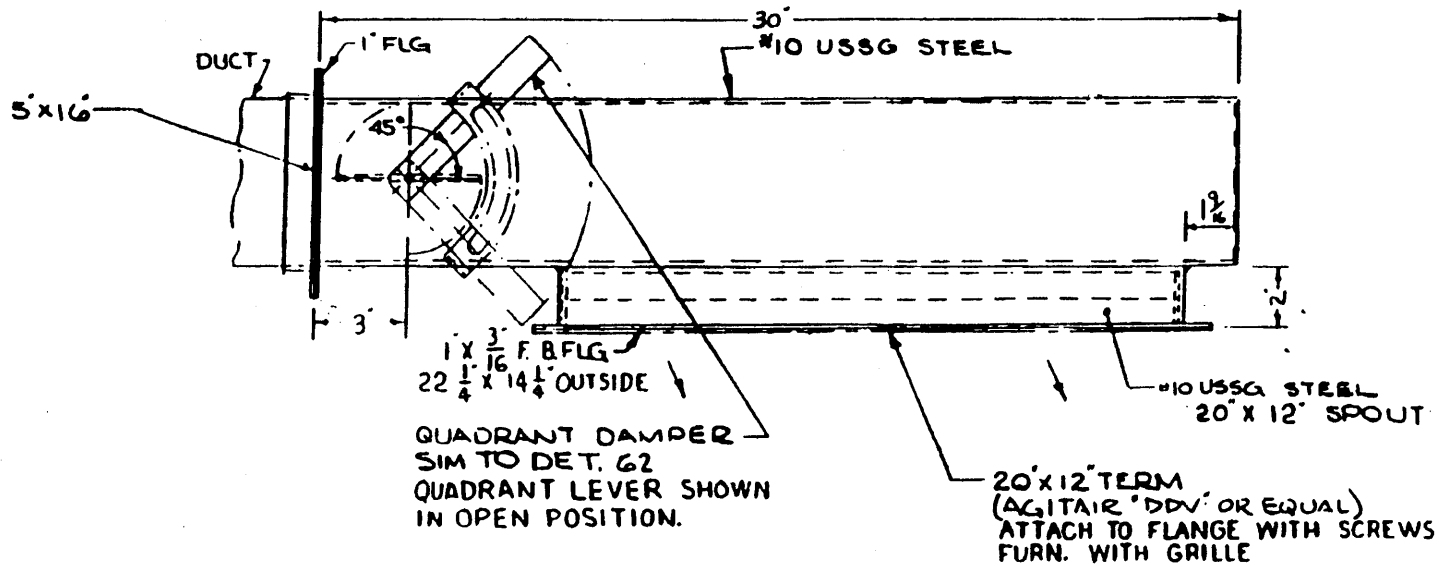

TERMINAL BOX FOR GRILLE TYPE DIFFUSING TERMINAL

(FOR USE AT PRESS OPERATOR'S STATION)

DETAIL 29	
DWG NO. 501 — 4870233	REV.
STANDARD DETAILS	SH 34 OF

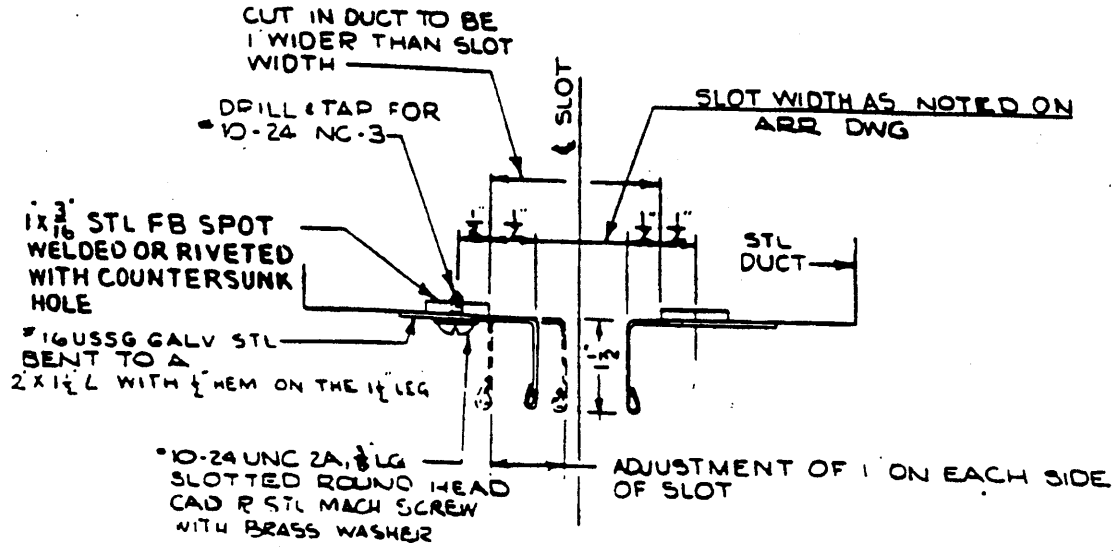

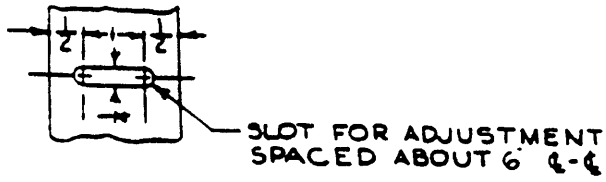

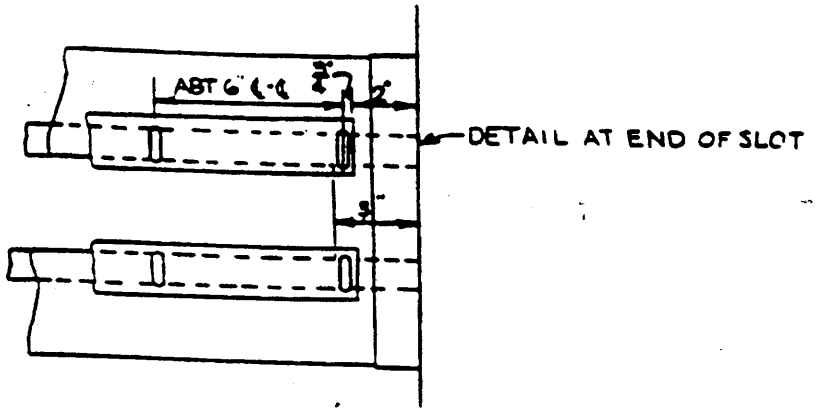

SLOTTED DUCT

DWG. NO. 501 — 48TO233	DETAIL 30
STANDARD DETAILS	SHEET 35 OF 115

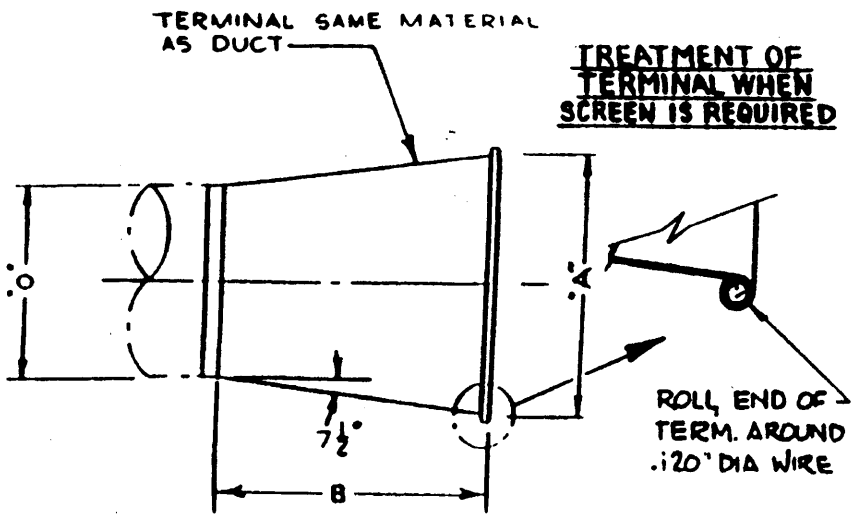

TERMINAL SIZES	
TYPE "J"	
7½° SLOPE	
A-O	B
½"	2"
1"	3½"
1½"	5½"
2"	7½"
2½"	9½"
3"	11½"
3½"	13½"
4"	15½"
4½"	17"
5"	19"
5½"	21"
6"	22½"

TYPE "J" SUPPLY TERMINAL

NOTE:

1. THE ITEMS SHOWN HEREON ARE SUITABLE FOR GRADE "A" SHOCK APPLICATION BY EXTENSION FROM THE BELLMOUTH TERMINAL TESTED AS DESCRIBED IN NN TEST REPORT 2477-J AND APPD BY SUPSHIP LTR CVAN68C 1/9400-1 SER 283B-1279 DATED 5-11-70. NAVAL APPROVAL OF EXTENSION IS SUPSHIP LTR DLGN 38C1/9400-1 SER 283-2151 DATED 7-3-72

DETAIL 31

DWG. NO. 501 — 4870233

STANDARD DETAILS

SHEET 31 OF 140

TERMINAL DIMENSIONS		
NOM. "A"	FACE "B"	LENGTH "L"
3	4½	4
3½	5	
4	5½	
4½	6½	
5	7	
5½	7½	
6	8	
6½	8½	
7	9	
7½	9½	
8	10	
9	11½	5
10	12½	
11	13½	
12	15	6
13	16	
14	17½	7
15	18½	
16	19½	
17	21	8
18	22	

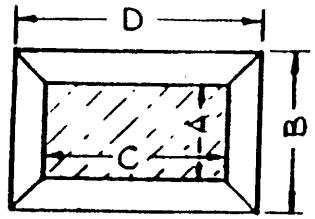

RECTANGULAR TERMINAL
(SEE NOTES 1 & 2)

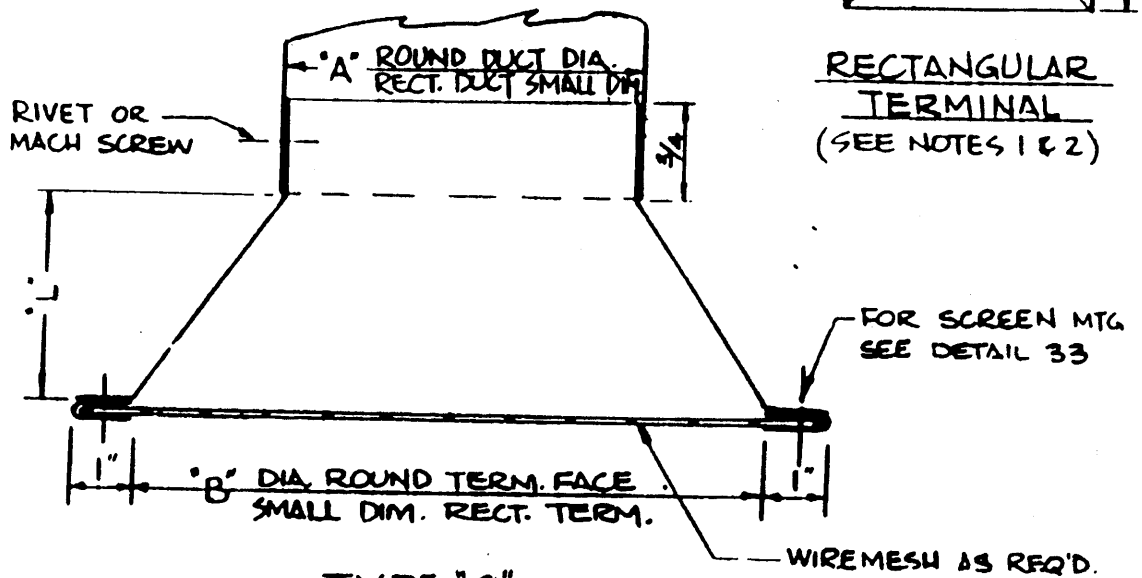

TYPE "C"
CONTRACTING EXHAUST TERMINAL
FOR ROUND & RECT. DUCT

SEE NOTE 3-T, REF. 1

NOTES:

1. FOR STANDARD RECTANGULAR TERMINALS, "D" SHALL BE DETERMINED BY FORMULA ~ $D = B + (C - A)$
   LENGTH SHALL BE AS GIVEN IN TABLE OF DIMENSIONS.
2. WHERE DUCT DIMENSIONS EXCEED THOSE GIVEN IN THIS STANDARD OR WHERE RECT. TERM. MUST BE SHAPED TO SUIT SPECIFIC CONDITIONS, THE FOLLOWING DESIGN CRITERIA SHALL BE USED:
   (a) FACE VELOCITY (BASED ON NET AREA & TO SUIT AVAILABLE PRESS.) - 1000 - 3000 FPM.
   (b) INCLUDED ANGLE OF CONVERGING SIDES SHOULD NOT EXCEED 30°
   (c) MINIMUM LENGTH OF TERMINAL - 4 INCHES

DETAIL 32

DWG NO. 501 — 4870233

STANDARD DETAILS | SHEET 37 OF 14

NOTE:

1. THE ITEMS SHOWN HEREON ARE SUITABLE FOR GRADE "A" SHOCK APPLICATION BY EXTENSION FROM THE BELLMOUTH TERMINAL TESTED AS DESCRIBED IN NN TEST REPORT 2477-J AND APPD BY SUPSHIP LTR CVAN 68C1/9400-1 SER 283B-1278 DATED 5-11-70 NAVAL APPROVAL OF EXTENSION IS SUPSH LTR DLGN 38C1/9400-1 SER 283-2151 DATED 7-3-72.

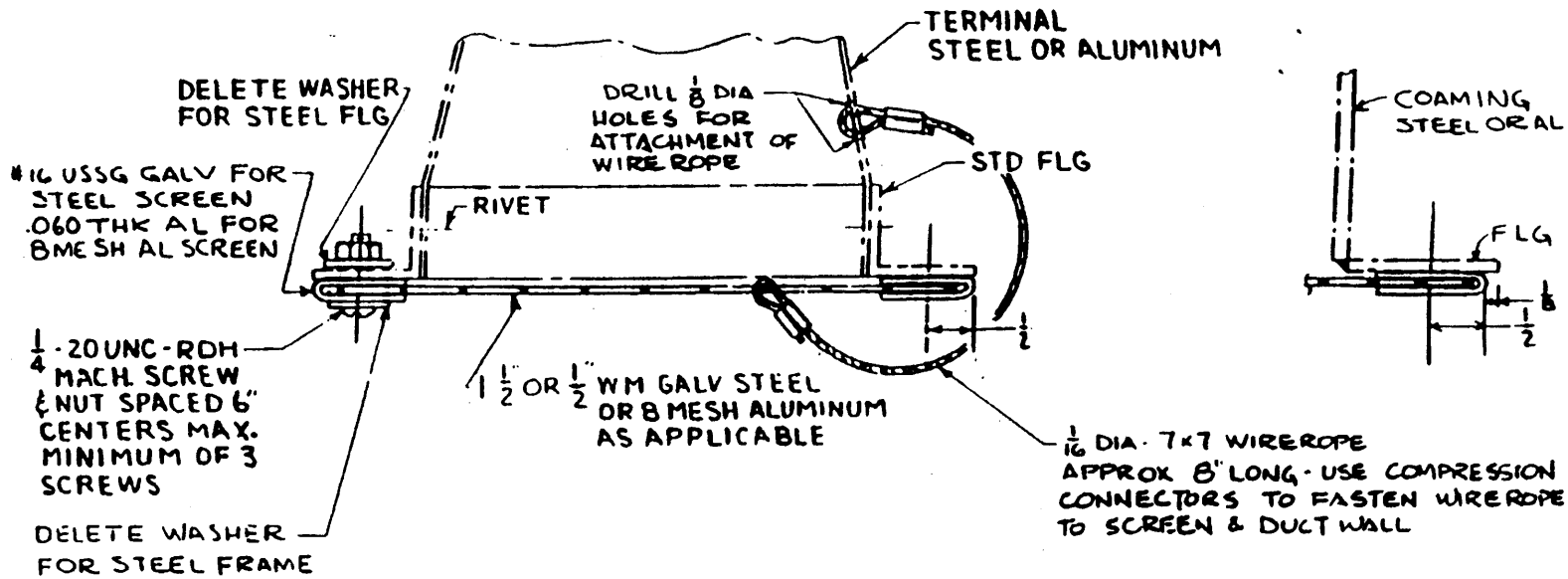

SCREEN FOR TERMINAL

SUITABLE FOR GRADE "A" SHOCK

DETAIL 33

DWG NO. 501 — 4870233

STANDARD DETAILS

SHEET 38 OF 140

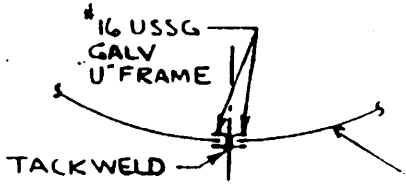

DETAIL C-C

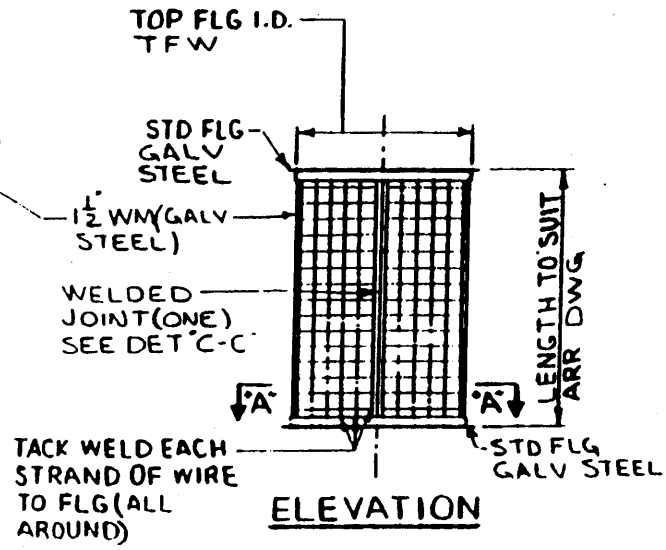

ELEVATION

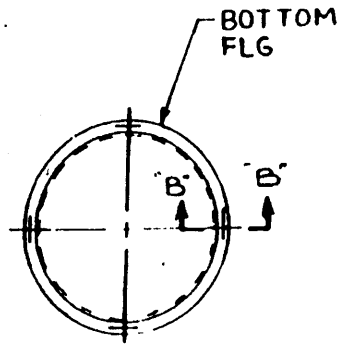

DETAIL A-A

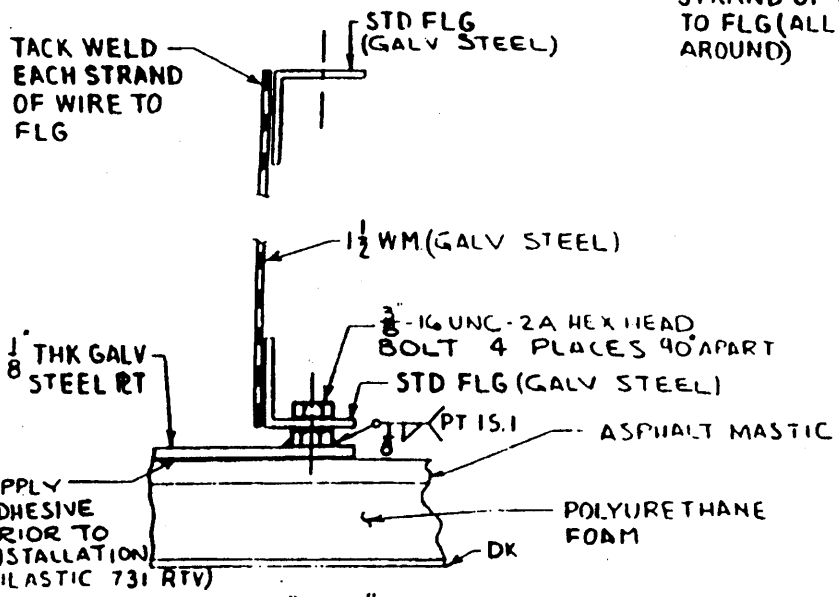

DETAIL "B-B"

INTAKE SCREEN FOR VERTICALLY MOUNTED FANS IN REFRIGERATED SHIPS STORES SPACES

DETAIL 34

DWG NO. 501 — 4870233 REV

STANDARD DETAILS SHEET 39 OF 140

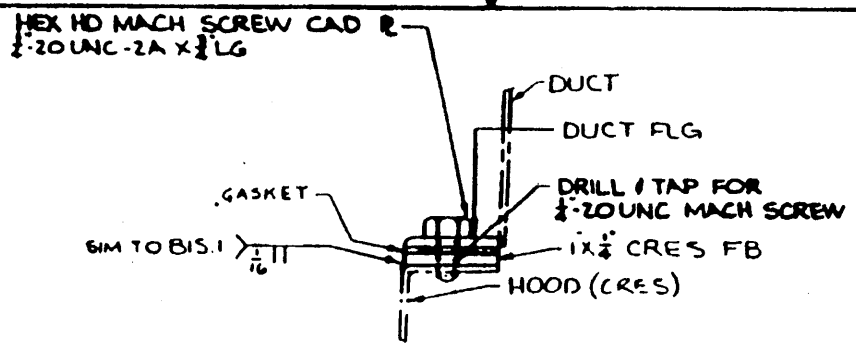

DETAIL "A"

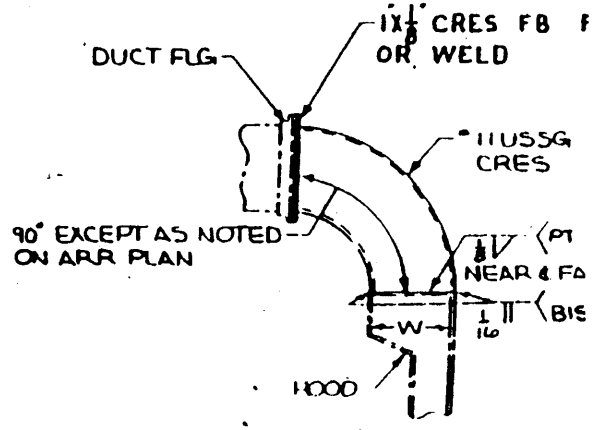

DETAIL "B"
ALTERNATE CONNECTION

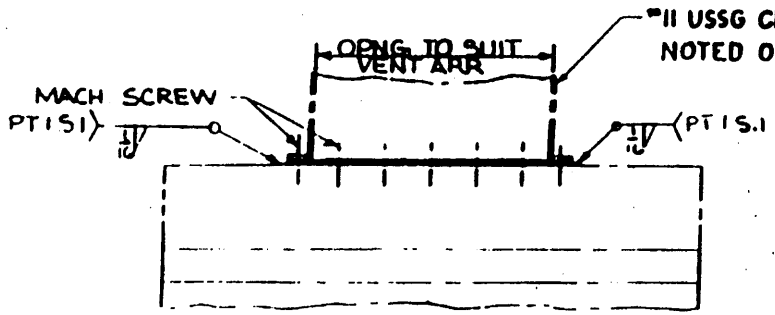

ELEVATION

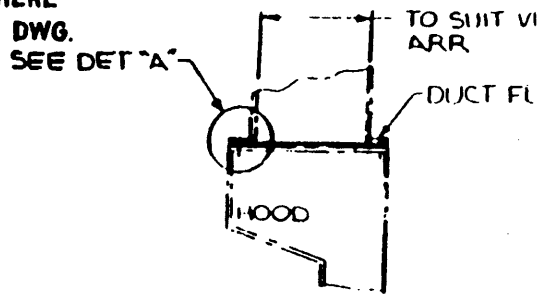

SECTION

GREASE INTERCEPTOR HOOD DUCT CONNECTION

SEE NOTE 18.1, REF 1

DETAIL 35	
DWG NO. 501 — 4870233	
STANDARD DETAILS	SHEET 40 OF 146

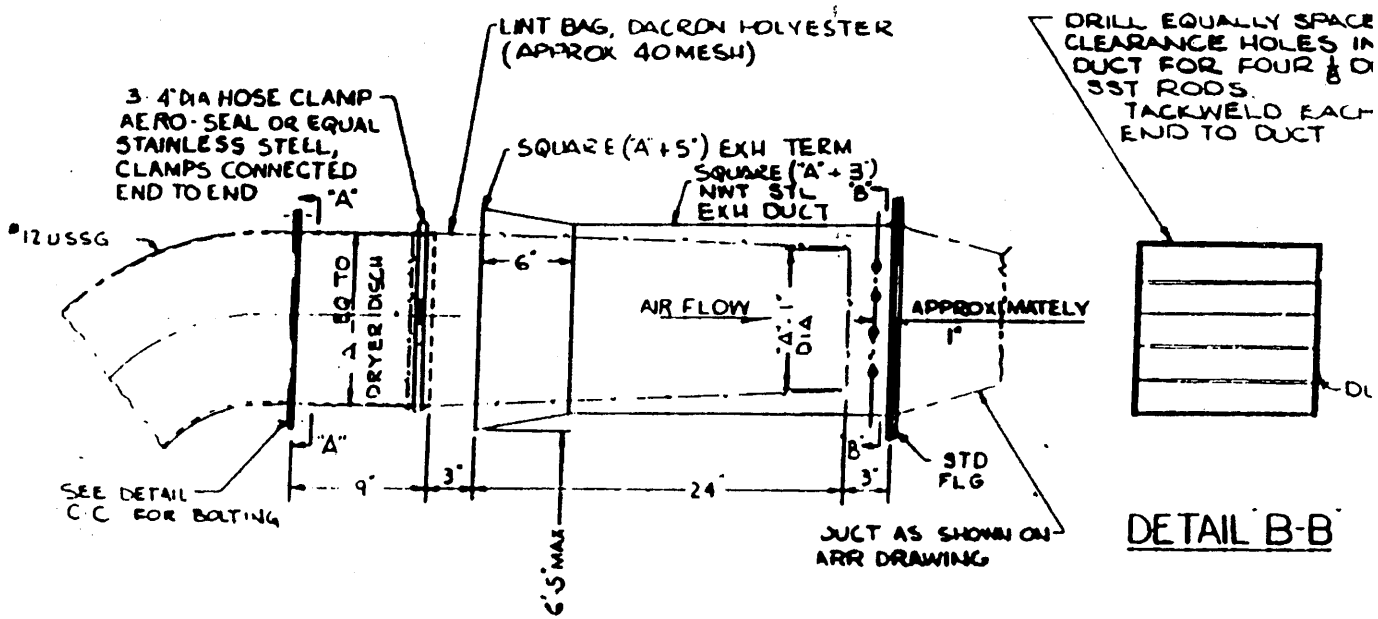

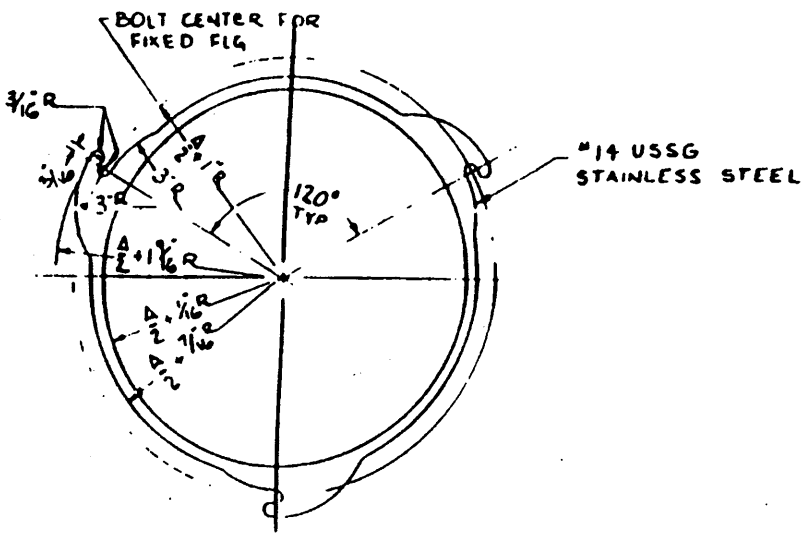

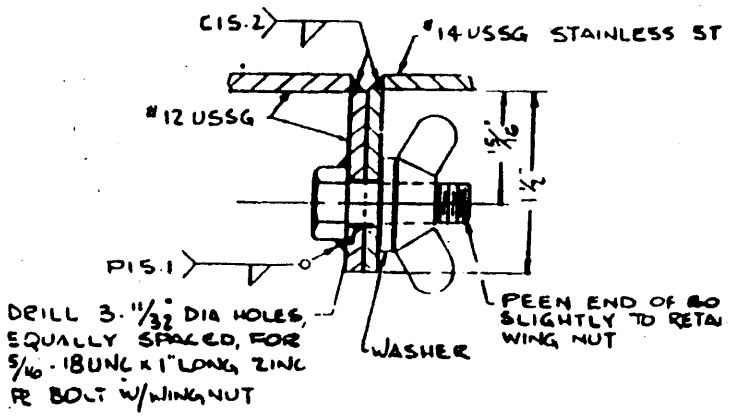

LINT BAG FOR TUMBLER DRYER EXHAUST

DETAIL 36

DWG NO. 501 — 4870233

STANDARD DETAILS

SHEET 41 OF 145

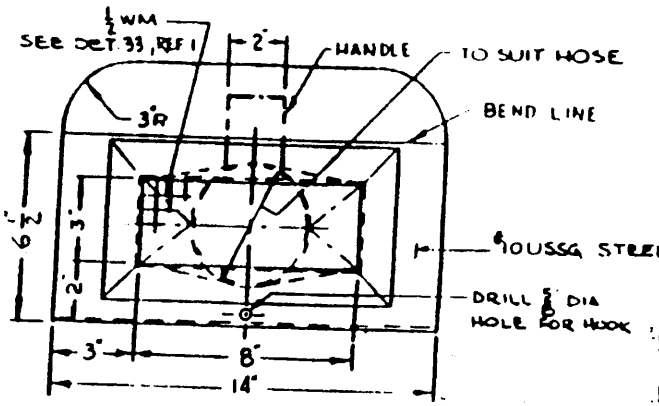

SECTION "A-A"

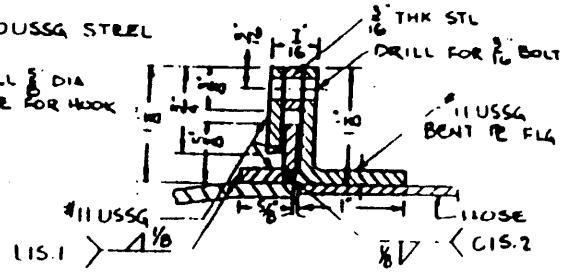

SECTION "B-B"

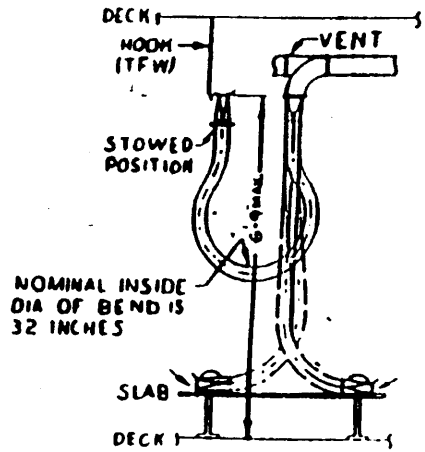

TYP HOOK UP

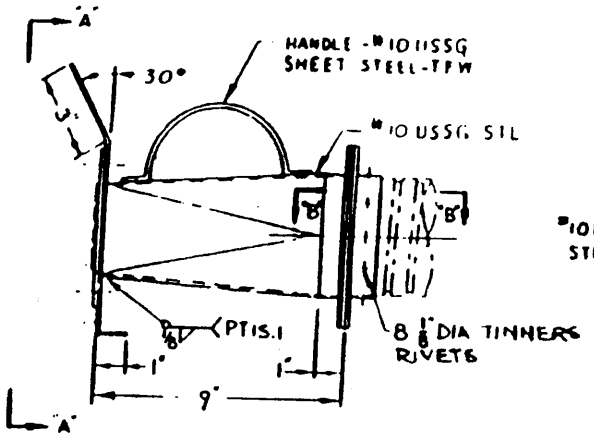

EXHAUST TERM

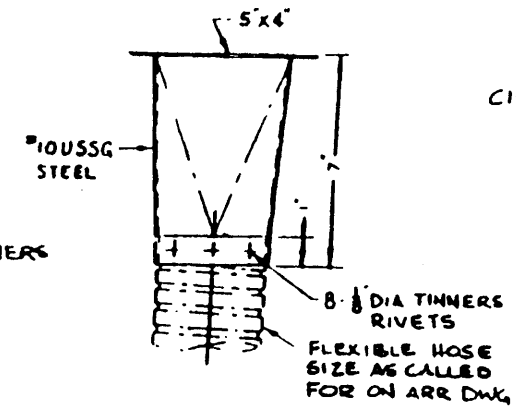

UPPER CONNECTION

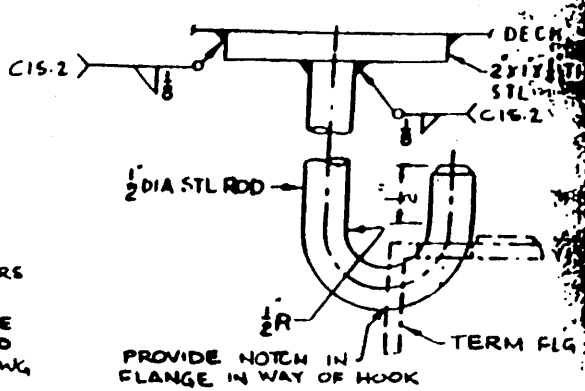

WELDING SLAB EXHAUST TERMINAL

DETAIL 37

DWG. NO. 501 — 4870233

STANDARD DETAILS

SHEET 42 OF 140

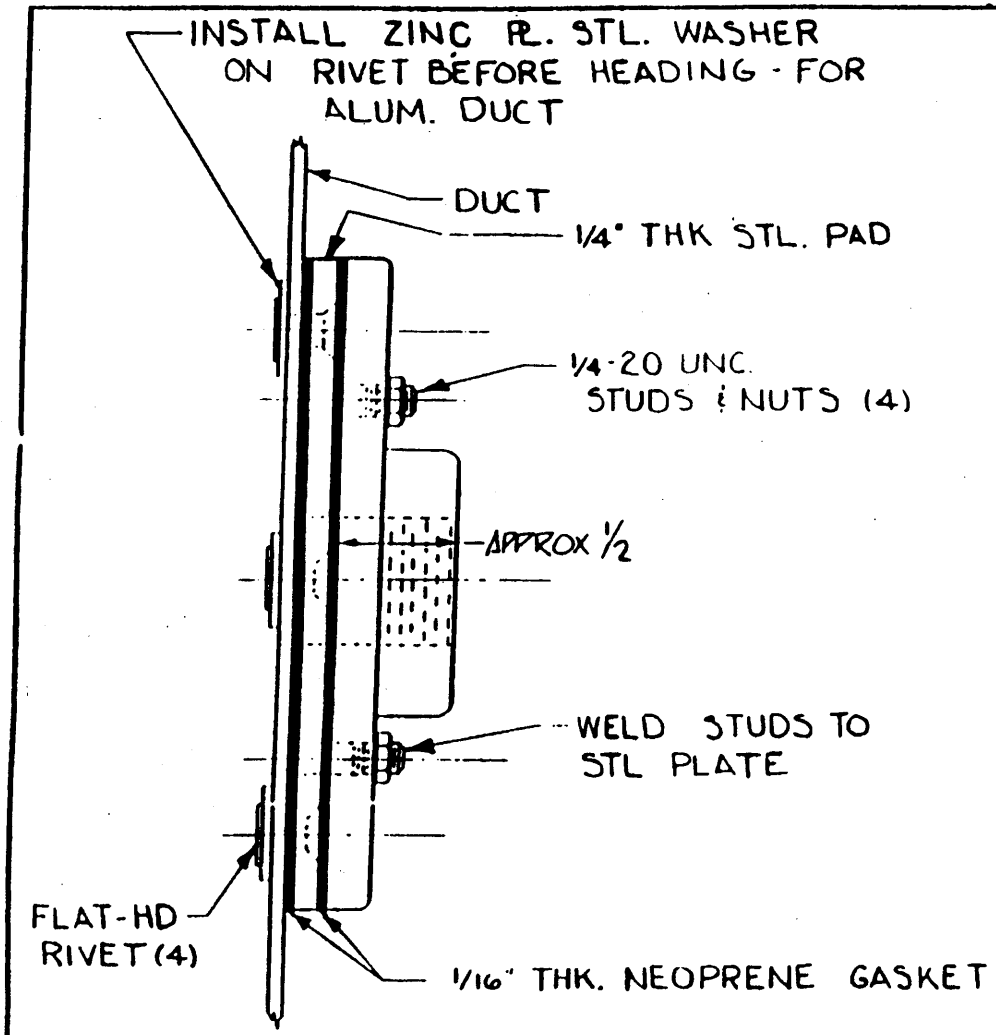

SECTION "A-A"

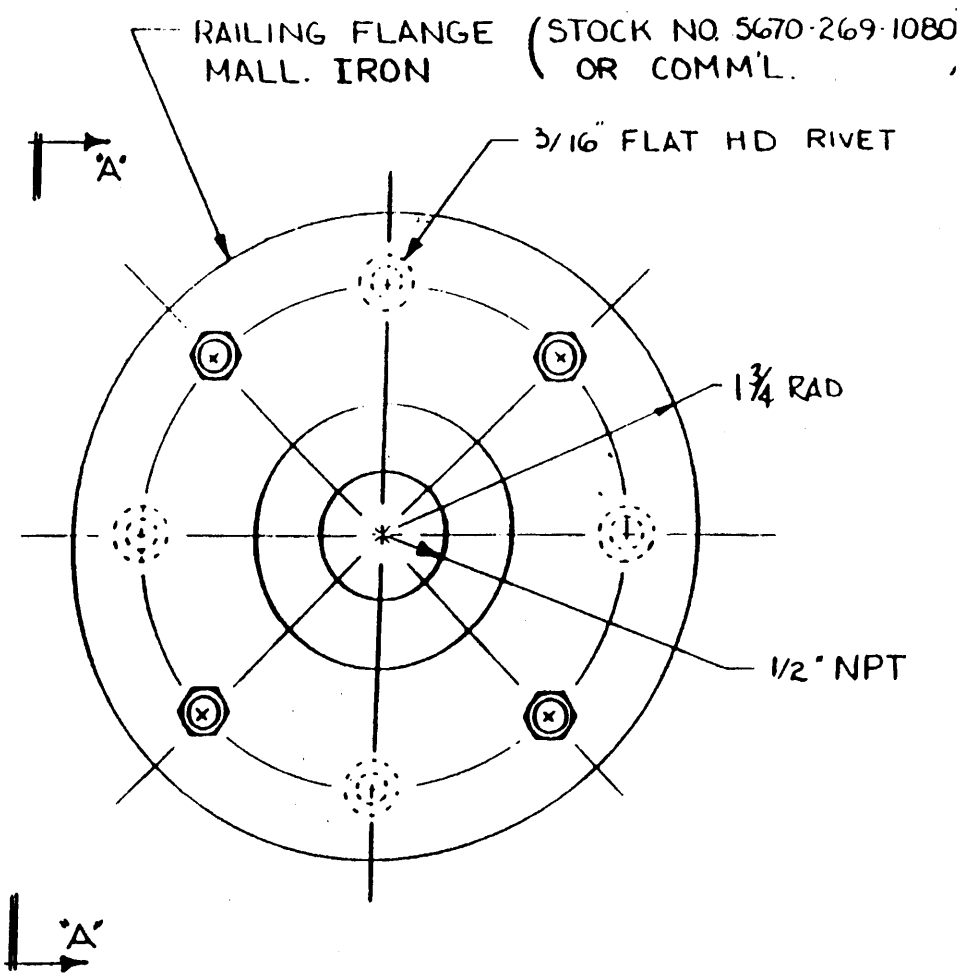

THERMOSTAT MOUNTING PAD FOR COMMISSARY SPACES

PADS TO BE INSTALLED AFTER VENT DUCT INSTALLATION. FOR LOCATION OF THERMOSTAT SEE VENT ARRGT. DRAWING

DETAIL 38	
DWG. NO. 501 — 4870233	REV
STANDARD DETAILS	SHEET 43 OF 140

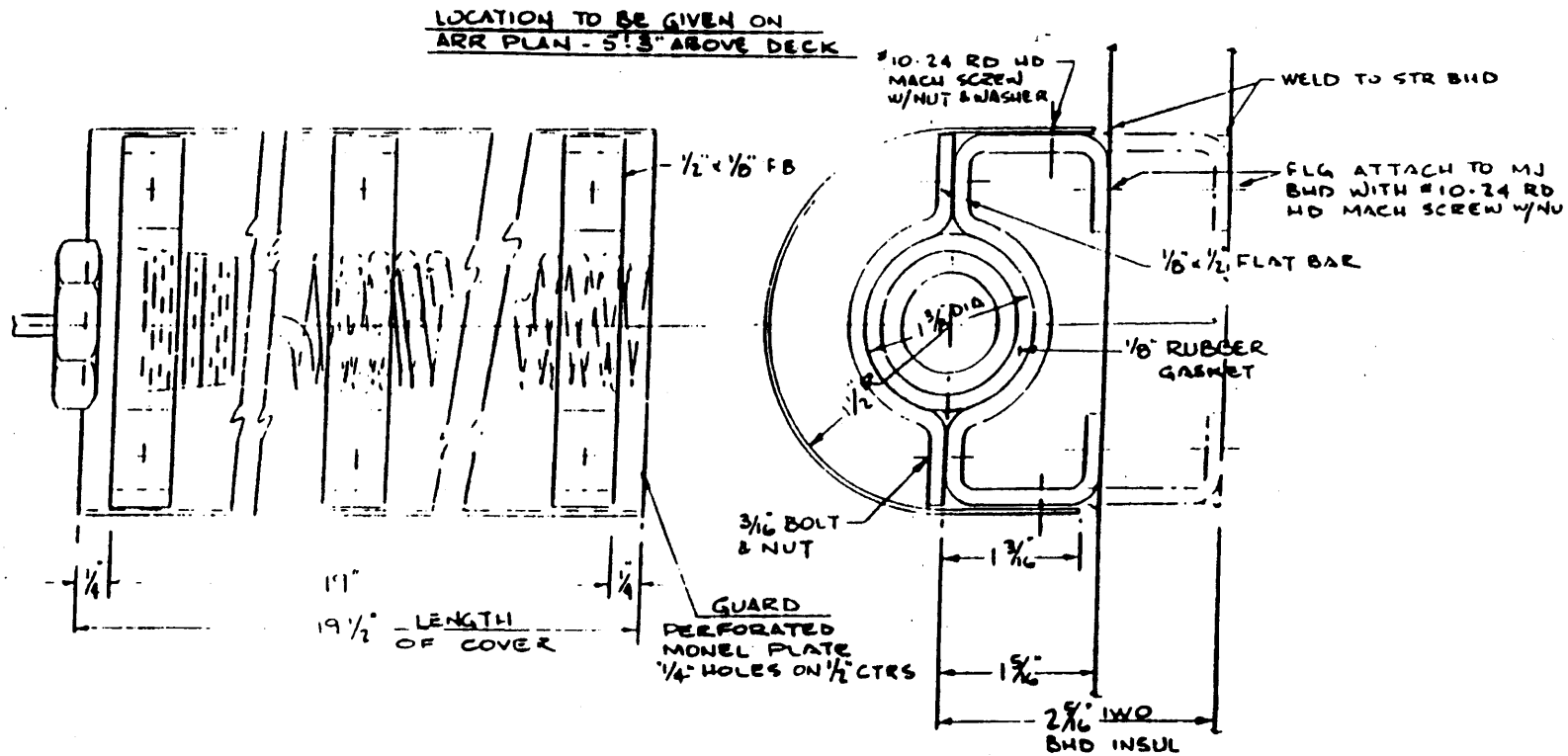

METHOD OF SECURING TEMPERATURE CONTACT MAKER

DETAIL 39

DWG NO. 501 — 4870233

STANDARD DETAILS

SHEET 44 OF 140

NOTE:

1. THE ITEM SHOWN HEREON IS SUITABLE FOR GRADE "A" SHOCK APPLICATION BY EXTENSION FROM THE DRAIN TESTED AS DESCRIBED IN NN TEST REPORT 4221-9 AND APPD BY SUPSHIP LTR CVAN 68 C1/9380/9400-1 SER 283A-1760, DATED JULY 7, 1969. NAVAL APPROVAL OF EXTENSION IS SUPSHIP LTR DLGN 38 C1/9400-1 SER 283A-2239 DATED JULY 11, 1972.

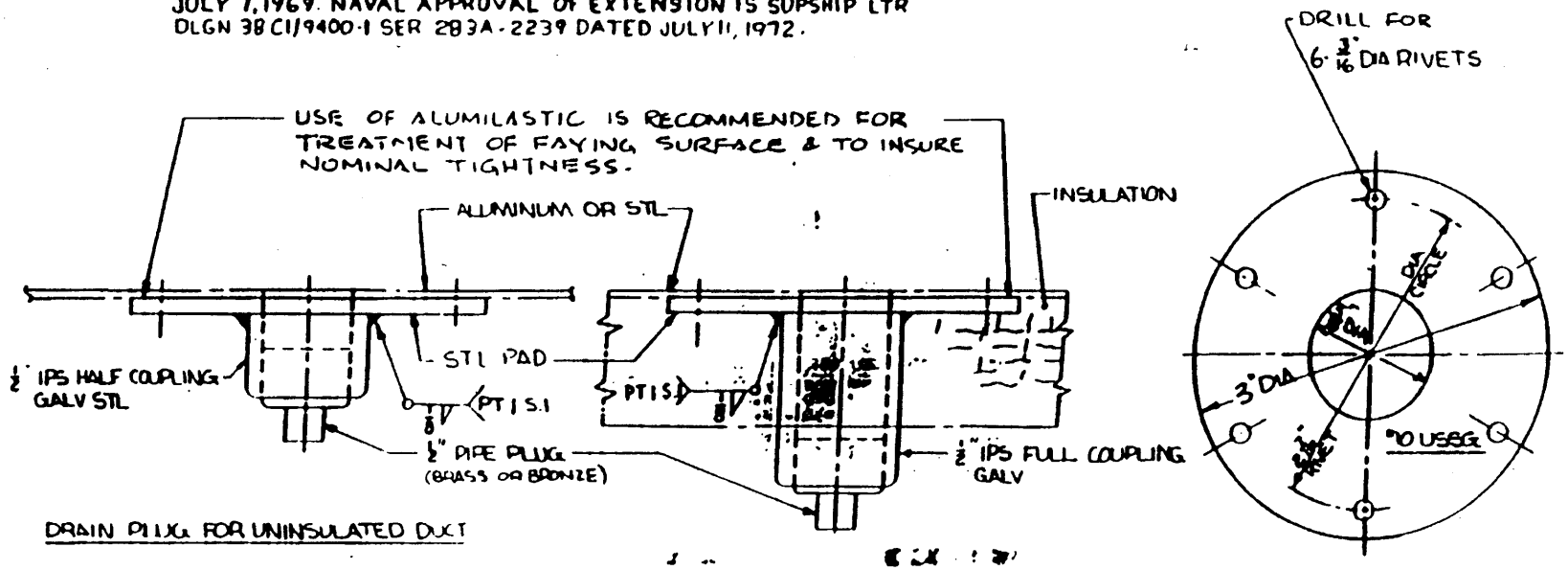

DRAIN PLUG FOR UNINSULATED DUCT

DRAIN PLUG FOR INSULATED DUCT

DETAIL OF PAD
ROLL TO SUIT WHEN USED ON ROUND DUCT

DRAIN FOR NWT DUCT

SEE NOTE 4-1, REF 1

SUITABLE FOR GRADE "A" SHOCK

ALTERNATE INSTL

DETAIL 40

DWG. NO. 501 — 4870233

STANDARD DETAILS

SHEET 45 OF 14

NOTE:

1. THE ITEM SHOWN HEREON IS SUITABLE FOR GRADE A SHOCK APPLICATION BY EXTENSION FROM THE DRAIN TESTED AS DESCRIBED IN NN TEST REPORT 4221-9 AND APPD BY SUPSHIP LTR CVAN 68C1/9380/9400-1 SER 283A-1760 DATED JULY 7, 1969. NAVAL APPROVAL OF EXTENSION IS SUPSHIP LTR DLGN 38C1/9400-1 SER 283A-2239 DATED JULY 11, 1973.

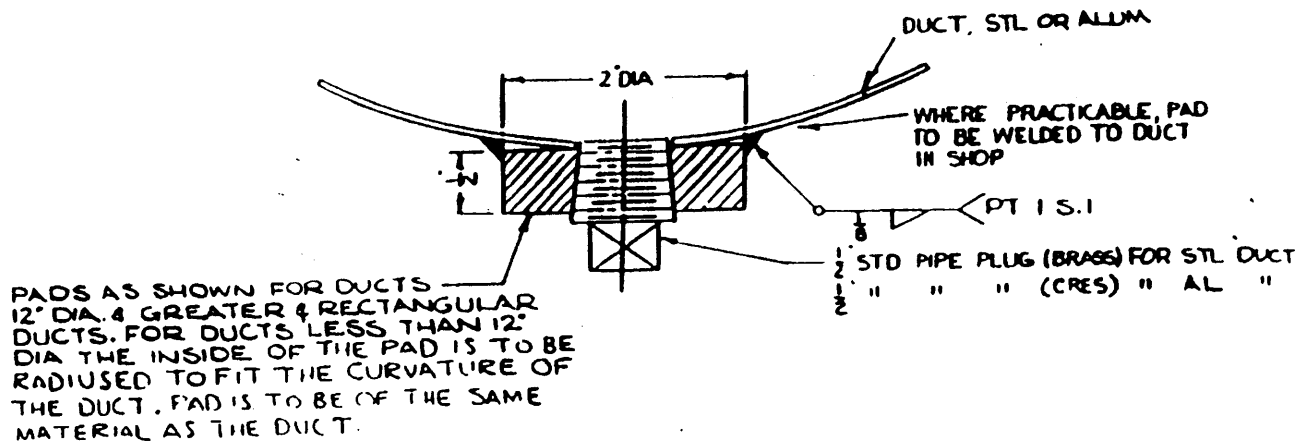

DRAIN FOR WT DUCT

SUITABLE FOR GRADE "A" SHOCK

SEE NOTE 4-1, REF 1

ALTERNATE INSTL

DETAIL 41

DWG NO. 501 — 4870233

STANDARD DETAILS

SHEET 46 OF 140

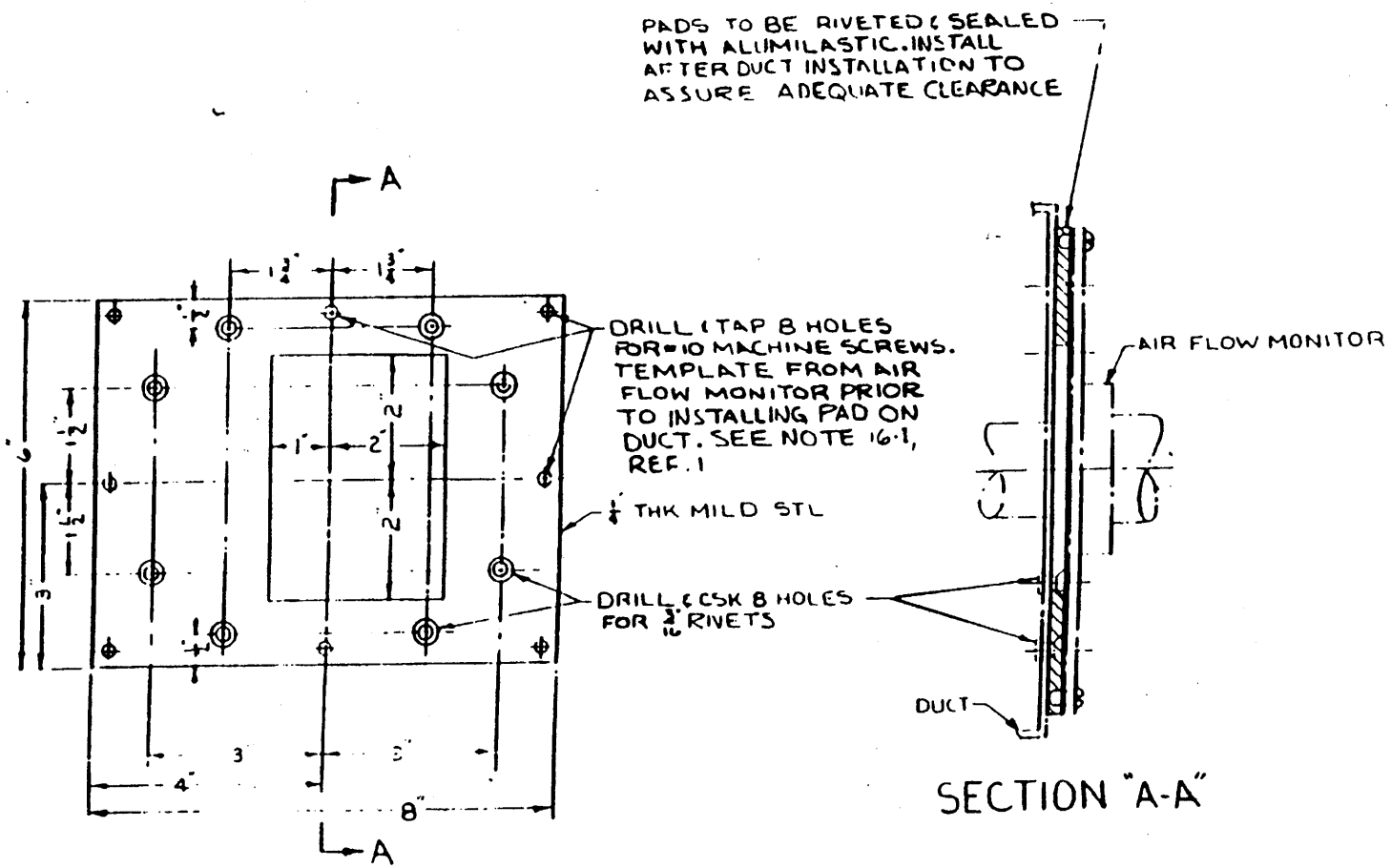

DETAIL OF MOUNTING PAD FOR AERODYNE AIR FLOW MONITOR

FOR LOCATION OF AIR FLOW MONITORS SEE VENT ARRGT DWG

DETAIL 42

DWG NO. 501 — 4870233 | REV.

STANDARD DETAILS | SH 47 OF 1

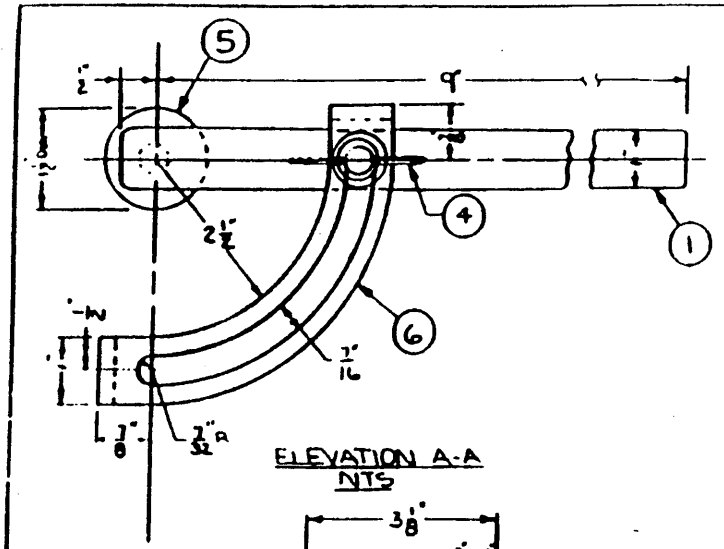

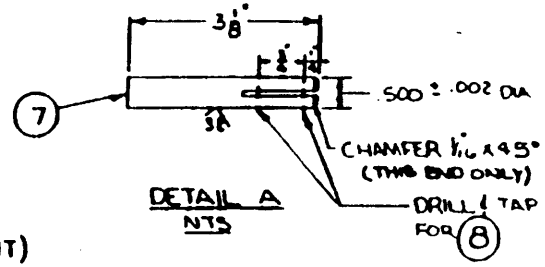

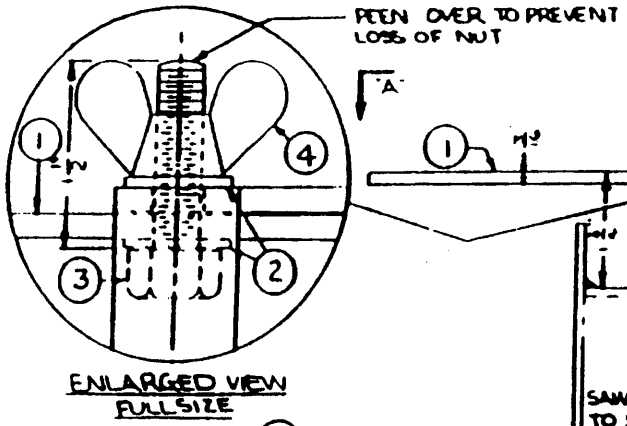

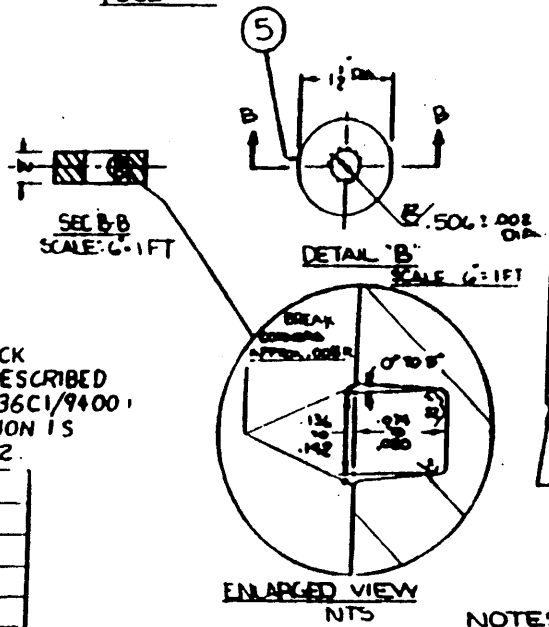

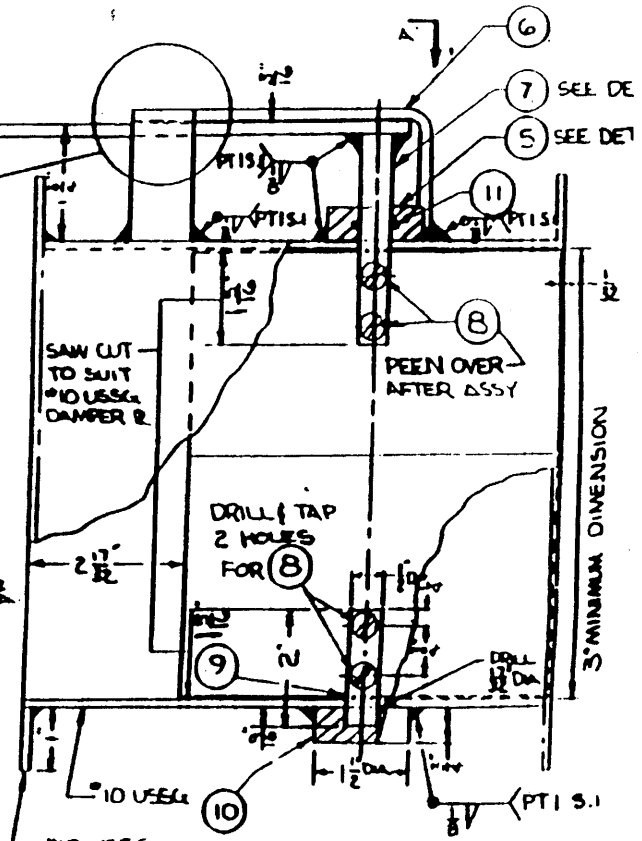

QUADRANT DAMPER
ASSEMBLY
SCALE: 6" = 1 FT

NOTES (CONT)

3 THE ITEMS SHOWN HEREON ARE SUITABLE FOR GRADE A SHOCK APPLICATION BY EXTENSION FROM THE DAMPER TESTED AS DESCRIBED IN NN TEST REPORT 4264-K AND APPD BY SUPSHIP LTR DLGN 36C1/9400 SER 283B-2144 DATED 7/21/71. NAVAL APPROVAL OF EXTENSION IS SUPSHIP LTR DLGN 38C1/9400-1 SER 283A-2240 DATED 7-11-72.

BILL OF MATERIAL

ITEM	DESCRIPTION	NO PER ASSY	MATERIAL	SPEC	REMARKS
1	QUADRANT LEVER	1	STEEL	[illegible]	3/16 x 1 FB
2	WASHER	2	BRASS	[illegible]	1 I.D
3	BOLT	1		[illegible]	3/8 UNC x 1 1/2
4	WINGNUT	1		COML	3/8-16 UNC
5	BEARINGS	1	NICKEL-COPPER	[illegible]	SEE DET "B"
6	QUADRANT	1	STEEL	[illegible]	3/16 x 1
7	DAMPER SHAFT	1	NICKEL-COPPER	[illegible]	SEE DET "A"
8	SCREWS	4	STL ZINC PLATED	FF-S-92	#12-24 x 5/8
9	DAMPER SHAFT	1	STEEL	ABS	1/2 DIA x 2 LG
10	BEARINGS	[illegible]		[illegible]	1 1/2 DIA x [illegible]
11	O-RINGS	1	RUBBER	[illegible]	[illegible]

NOTES:

1 MINIMUM DAMPER SIZE TO BE 7" x 3"

2 DAMPER BLADE TO BE 1/16" LESS THAN INSIDE DAMPER DIMENSION

QUADRANT DAMPER (RECT) A.T. CASING

SUITABLE FOR GRADE "A" SHOCK

DETAIL 43

DWG NO. 501 — 4870233

STANDARD DETAILS

SHEET 48 OF 140

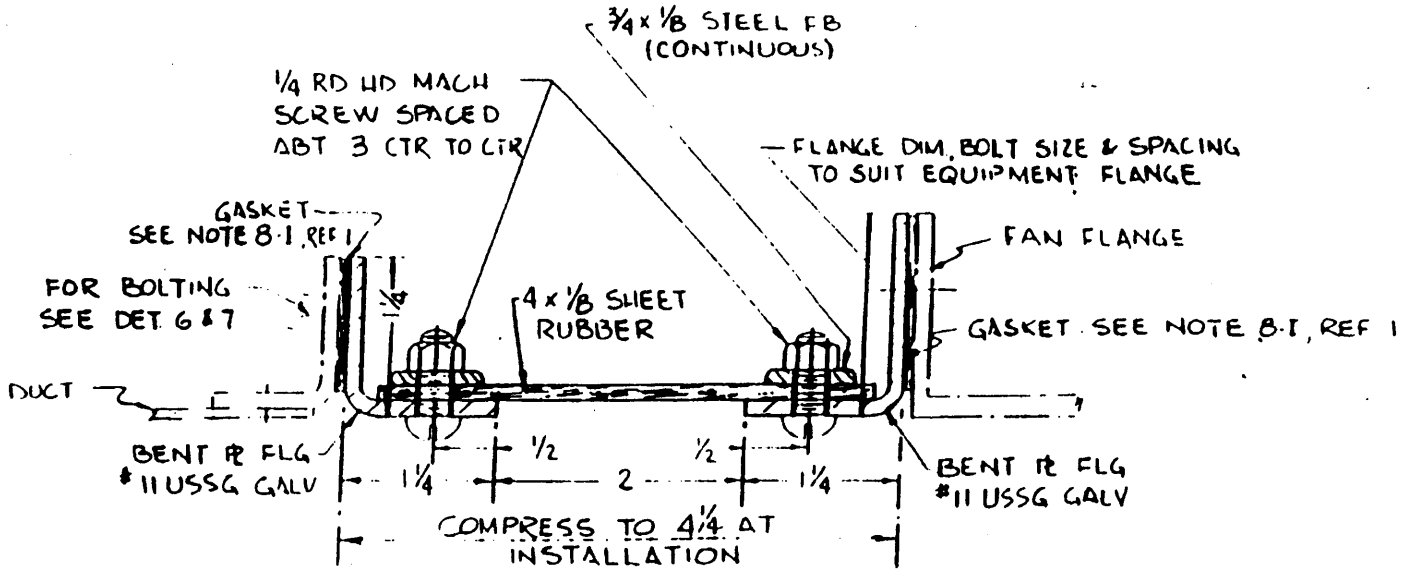

NON-WATERTIGHT FAN-DUCT FLEXIBLE CONNECTION

	DETAIL 44
DWG. NO. 501	4870233
STANDARD DETAILS	SHEET 49 OF 140

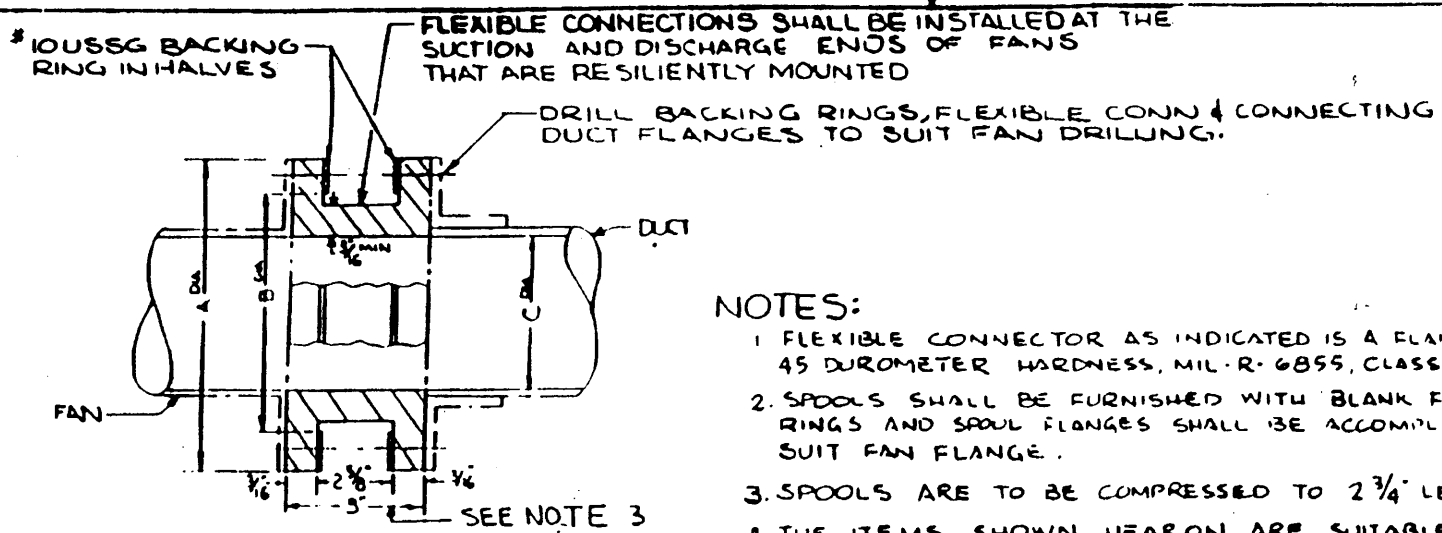

FLEXIBLE CONN BET FAN AND DUCT FOR USE WHEN FAN IS RESILIENTLY MOUNTED.

NOTES:

1. FLEXIBLE CONNECTOR AS INDICATED IS A FLANGED RUBBER SPOOL OF 45 DUROMETER HARDNESS, MIL-R-6855, CLASS 2.
2. SPOOLS SHALL BE FURNISHED WITH BLANK FLANGES. DRILLING OF BACKING RINGS AND SPOOL FLANGES SHALL BE ACCOMPLISHED AT INSTALLATION TO SUIT FAN FLANGE.
3. SPOOLS ARE TO BE COMPRESSED TO 2 3/4" LENGTH AT INSTALLATION.
4. THE ITEMS SHOWN HEAR ON ARE SUITABLE FOR GRADE 'A' SHOCK APPLICATION BY EXTENSION FROM FLEXIBLE CONNECTION TESTED AS DESCRIBED IN NEWPORT NEWS TEST 7587-9 AND APPROVED BY SUPSHIP LTR CVAN 6BCL/4380-1/9400-1 SER 283B-3404 DATED 1-5-70.

FAN SIZE	"A" OUTSIDE BACKING RING	"B" INS BACKING RING	"C" INS FLEX CONN
A 12	32 3/16"	30"	29 1/4"
A 16	35 9/16"	32"	31 1/4"
A30	49 3/16"	45"	44 1/4"
L 1/2	10 1/2"	8 3/8"	8"
CC 1/2	INLET 12 3/8"	INLET 10 3/8"	INLET 9 3/8"
	OUTLET 14 x 7 3/16"	OUTLET 11 3/4 x 4 3/16"	OUTLET 11 x 4 1/16"
CC 8	INLET 39 7/8"	INLET 37 7/8"	INLET 36 7/8"
	OUTLET 35 1/4 x 22 3/8"	OUTLET 33 x 20 1/8"	OUTLET 32 1/4 x 19 1/4"

FAN SIZE	"A" OUTSIDE BACKING RING	"B" INS BACKING RING	"C" INS FLEX CONN
A 1/2	12 1/2"	10 1/2"	9 1/2"
A 3/4	13 1/2"	11"	10 1/2"
A1	16"	13 1/2"	12 1/2"
A1 1/2	17 1/2"	15"	14 1/2"
A2	18 1/2"	16 1/2"	15 1/2"
A3	24 1/2"	21 1/2"	21 1/2"
A5	26 1/2"	23 1/2"	23 1/2"
A6	28 1/2"	25 1/2"	25 1/2"
A7	22 1/2"	20 1/2"	19 1/2"
A8	30 1/16"	27 1/2"	27 1/4"
A10	32 1/2"	29 1/2"	29 1/2"
A11	35 1/2"	31 1/2"	31 1/2"

BACKING RINGS FOR WT/AT FAN-DUCT FLEXIBLE CONN

SUITABLE FOR GRADE "A" SHOCK

DETAIL 4

DWG NO. 501 — 4870233

STANDARD DETAILS

SHEET

NOTES:

1. ACCESS PLATES FOR WT AND NWT STEEL OR ALUMINUM DUCTWORK SHALL BE INSTALLED AS SHOWN IN METHODS "A", "B" OR "C".
2. TAPPING BAR FOR USE ON WT ALUMINUM DUCTWORK SHALL BE INSTALLED AS FOLLOWS:
   (a) DRILL TAPPING BAR & DUCT WALL FOR RIVETING ON APPROX 2" CENTERS. COUNTERSINK RIVET HOLES TO PROVIDE FLUSH SURFACE BETWEEN GASKET & TAPPING BAR
   (b) ASSURE THAT FAYING SURFACES ARE CLEAN AND DRY. COAT TAPPING BAR FAYING SURFACE WITH SILASTIC RTV-731 SEALER.
   (c) SECURE TAPPING BAR TO THE DUCT BY RIVETING AND WIPE AWAY EXCESS SEALER.
3. SPACING OF FASTENERS SHALL BE ABOUT 3" O.C. FOR NWT COVERS AND ABOUT 2" O.C. FOR WT AND AT (PRESSURE TESTED) COVERS. FASTENERS SHALL BE PLACED AT THE CORNERS OF NON-ROUND COVERS.
4. SIZE OF ACCESS OPENING AND COVER PLATE SHALL BE IN ACCORDANCE WITH NOTE 34-C, REF 1, AND INFORMATION GIVEN ON ARR DWG.

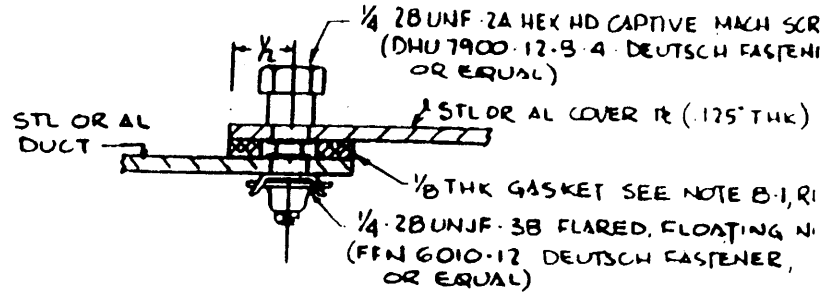

METHOD "A"
FOR USE ON NWT DUCT

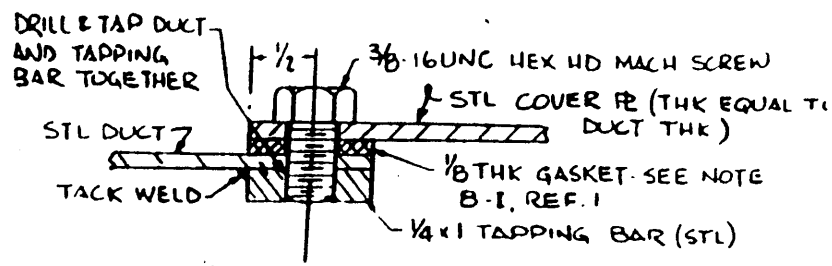

METHOD "B"
FOR USE ON STEEL WT DUCT

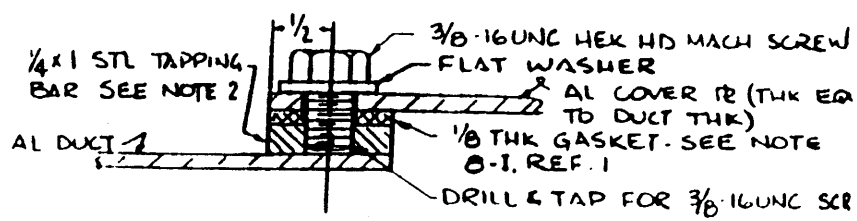

METHOD "C"
FOR USE ON ALUMINUM WT DUCT

DETAIL 46	
DWG NO. 501 — 4870233	
STANDARD DETAILS	SHEET 51 OF 14

LIST OF MATERIAL					
ITEM	DESCRIPTION	MATERIAL	MATL SPEC.	REMARKS	
1	BOLT, HEX HD, MACHINE - 3/8"-16UNC-2A	CRES	MIL-B-857A	L = 1 1/2"	
2	BOLT, HEX HD, MACHINE - 3/8"-16UNC-2A		MIL-B-857A	L = 3/4"	
3	HEX NUT - 3/8"-16UNC-2B		MIL-B-857		
4					
5	U-FRAME	GALV STL	QQ-S-775	#16 USSG	
6	WIRE MESH 1 1/2" x 0.025"		COMML		
7	THREADED STL INSERT 3/8"-16UNC	CRES	MS122083	L = .375	
8	PAD 2" DIA 1/4" THK	ALUM	QQ-A-225/8		
9	FLAT BAR 1 1/2" x 1/4"		QQ-A-200/7		

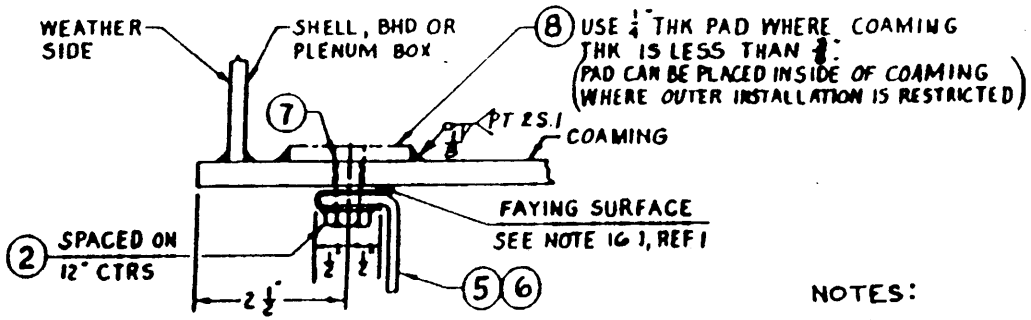

ASSY 99

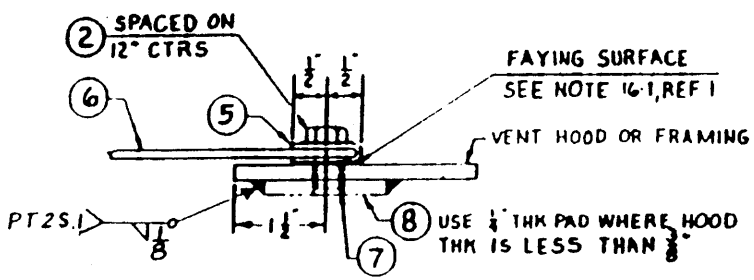

ASSY 97

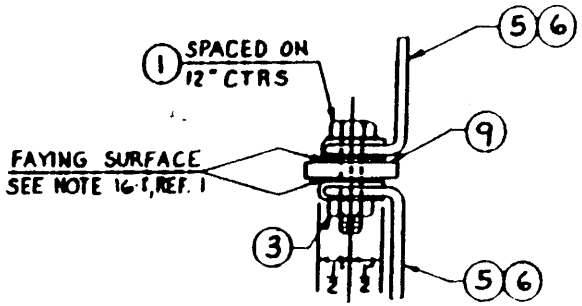

DETAIL "A"

WIRE MESH STIFFENER USED TO REDUCE UNSUPPORTED SPAN TO 48" MAXIMUM

NOTES:

1. THE ITEMS SHOWN HEREON ARE SUITABLE FOR GRADE "A" SHOCK APPLICATION BY EXTENSION FROM THE BELLMOUTH WITH SCREEN TESTED AS DESCRIBED IN NN TEST REPORT 2477-J AND APPD BY SUPSHIP LTR CVAN 68 C1/9400 1 SER 283B-1278 DATED MAY 11, 1970. NAVAL APPROVAL OF EXTENSION IS SUPSHIP LTR DLGN 38 C1/9400-1/9380-1 SER 283-2278 DATED JULY 14, 1972

SCREEN MOUNTING FOR WEATHER OPENINGS IN ALUMINUM STRUCTURE

DETAIL 47

DWG NO. 501 — 4870233 REV.

STANDARD DETAILS SH 52 OF

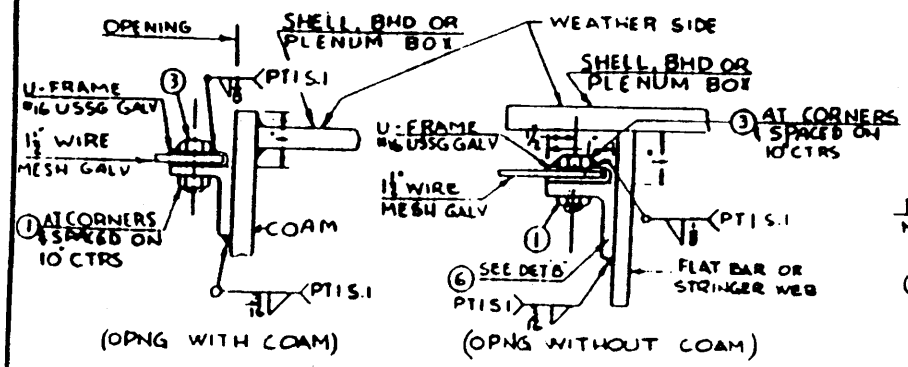

INSIDE SCREEN REMOVAL
(PREFERRED WHERE ACCESS TO INSIDE OF SCREEN AVAILABLE)

ASSY 98

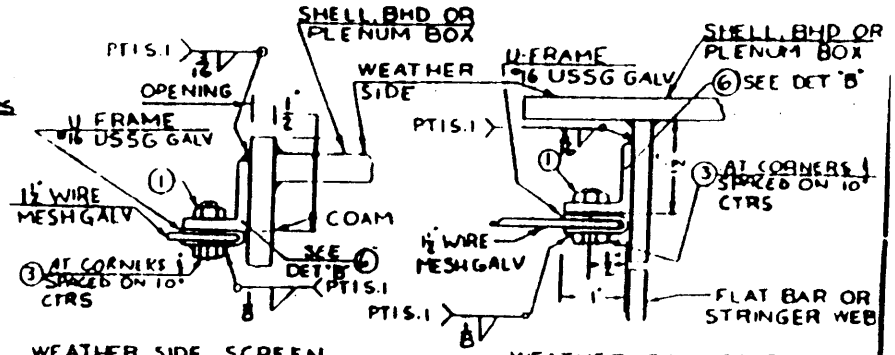

WEATHER SIDE SCREEN REMOVAL WITH COAM

WEATHER SIDE SCREEN REMOVAL WITHOUT COAM

ASSY 99

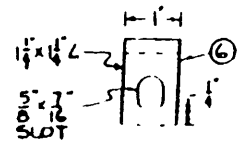

DETAIL "B"

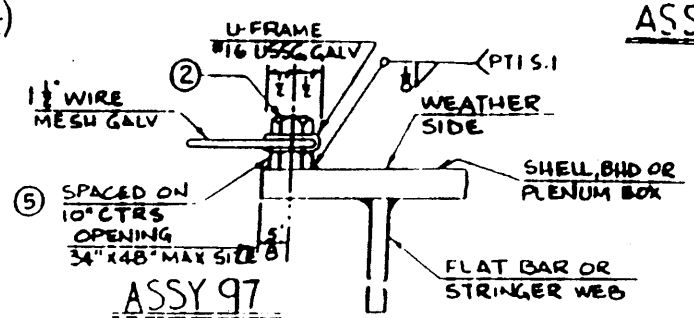

ASSY 97

WEATHER SIDE SCREEN REMOVAL WITHOUT COAM

NOTES: (1) THE ITEMS HEREON ARE SUITABLE FOR GRADE "A" SHOCK APPL BY EXTENSION FROM THE SCREEN TESTED AS INDICATED IN NEWPORT NEWS TEST REPORT NO 2477-J. APPROVED BY SUPSHIPS LTR (CVAN 68 C1/9380-1 SER 283B-1517) DATED 21 MAY 1971

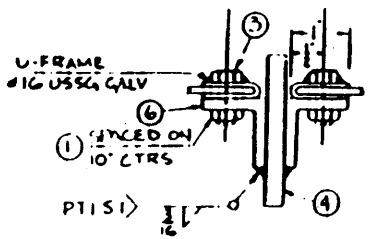

WIRE MESH STIFFENER USED TO REDUCE UNSUPPORTED SPAN TO 48" MAXIMUM

DETAIL "A"

LIST OF MATERIAL

ITEM	NAME OF PART	MATERIAL	MATERIAL SPEC	REMARKS
1	HEX NUT - 3/8 16 NC	CRES	MIL-B-857A	
2	HEX HD MACH SCREW - 3/8 - 16NC			L = 3/4"
3				L = 1 1/8"
4	FLAT BAR - 8 1/2" x 1/4"	STEEL	ABS	
5	HEX NUT - 3/8 - 16NC		MIL-B-857A	
6	ANGLE - 1 1/4" x 1 1/4" x 1" LG		ABS	

SCREEN MOUNTING FOR WEATHER OPENINGS IN STEEL STRUCTURE

DETAIL 48

DWG NO. 501 — 4870233 REV

STANDARD DETAILS SH 53 OF 140

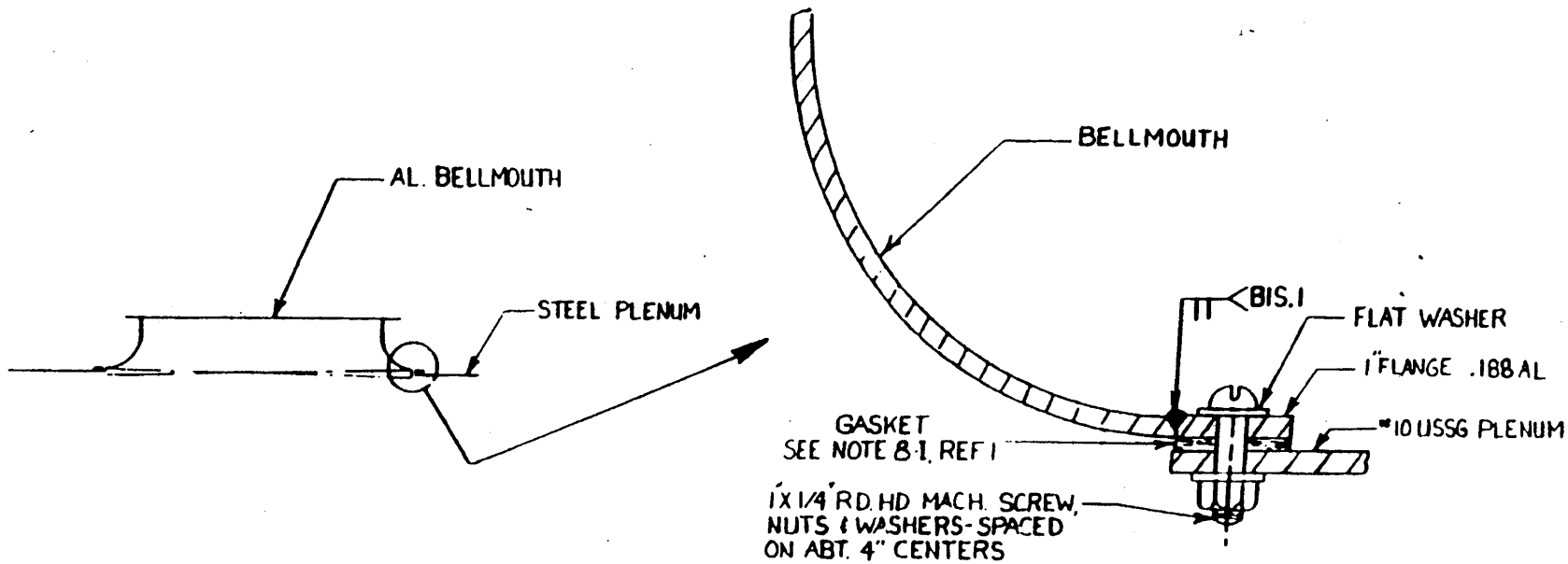

MOUNTING OF ALUMINUM BELLMOUTH TO STEEL PLENUM

DETAIL 49	
DWG NO. 501 — 4870233.	REV.
STANDARD DETAIL	SH 54

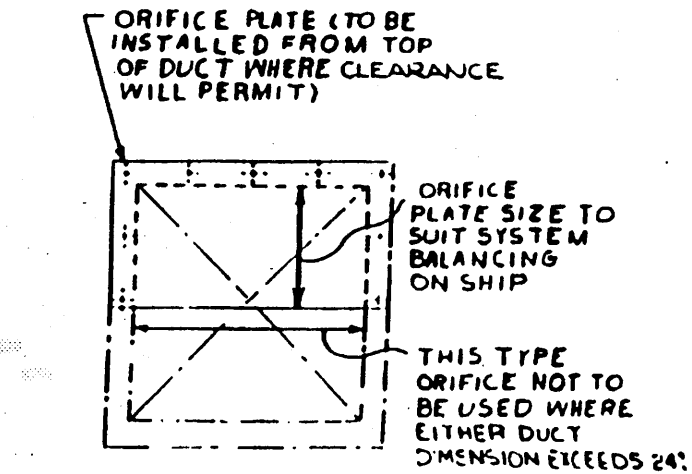

ALTERNATE INSTALLATION

NOT TO BE USED CLOSER THAN 5 EQUIVALENT DIAMETERS UPSTREAM OF A DIVISION, BRANCH, VANED ELBOW OR EQUIPMENT

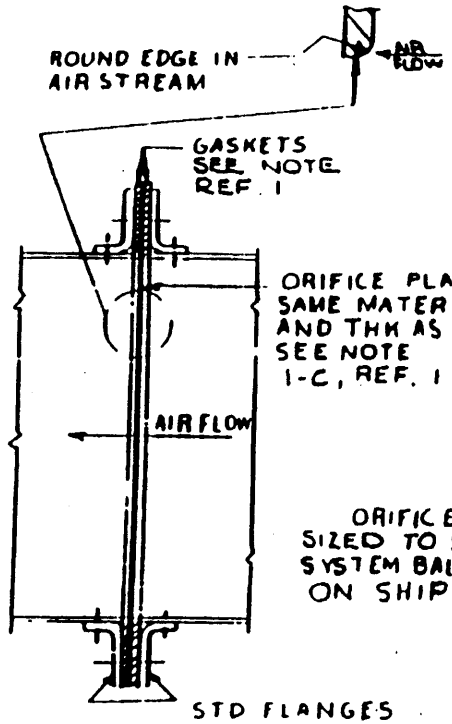

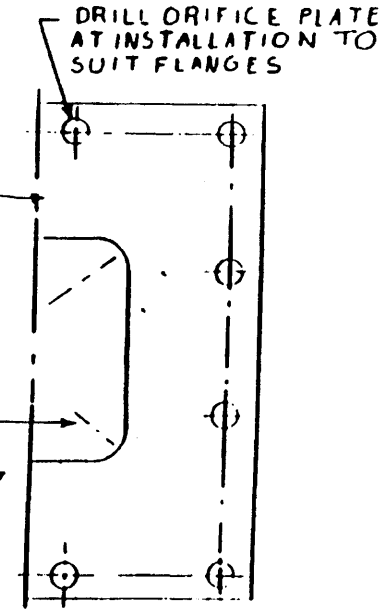

PREFERRED INSTALLATIC
HALF VIEW

ORIFICE PLATE

TYPICAL FOR RECT. DUCT SHOWN
ROUND DUCT SIMILAR W/ROUND ORIFICE

DETAIL 5(

DWG NO. 501—4870233	
STANDARD DETAILS	SHEET 55 OF 1

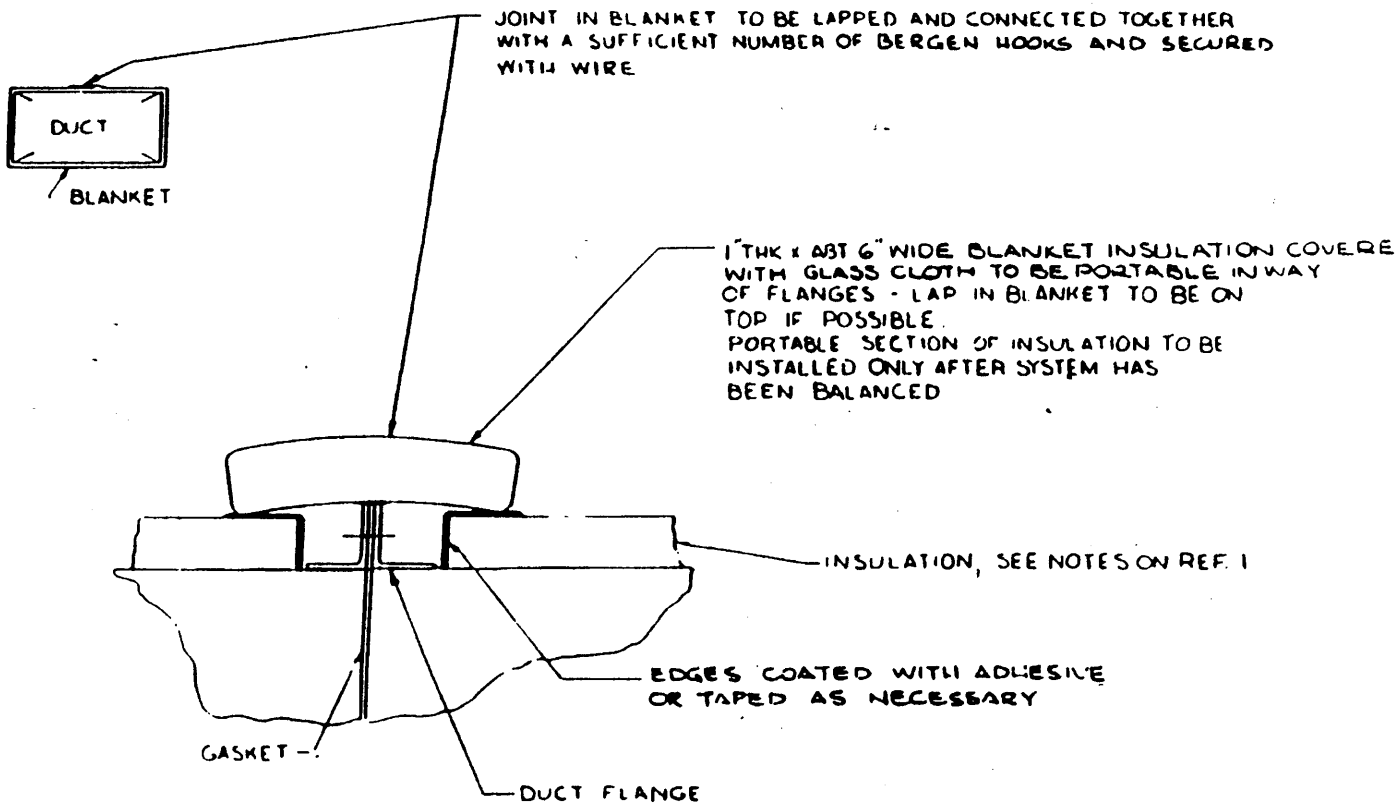

SECURING THERMAL BLANKET INSULATION AT DUCT FLANGES

DETAIL 51

DWG. NO. 501 — 4870233

STANDARD DETAILS

SHEET 56 OF 14

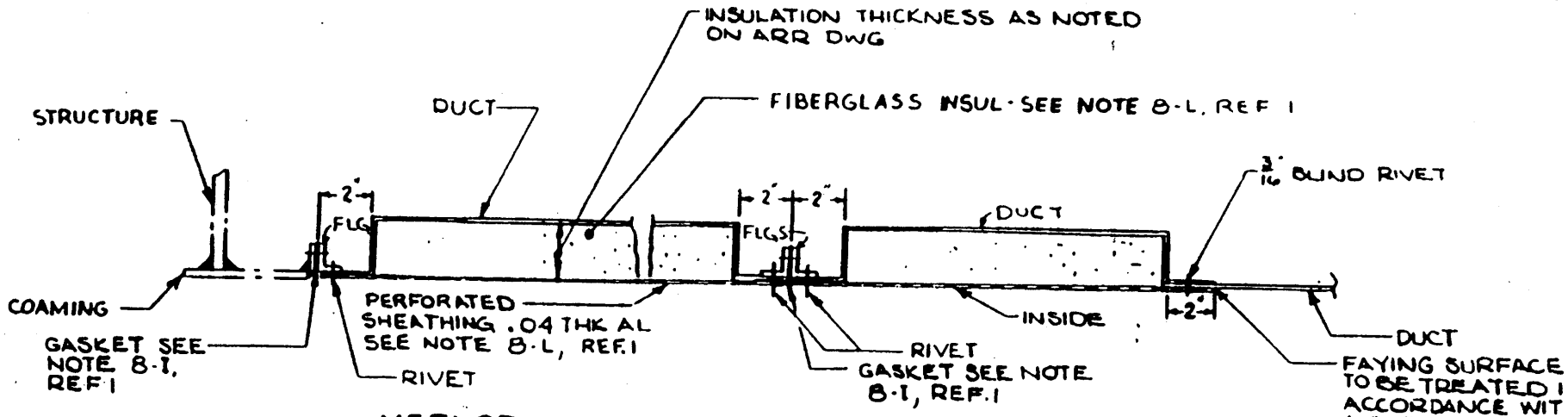

METHOD OF FABRICATION FOR RECTANGULAR DUCT

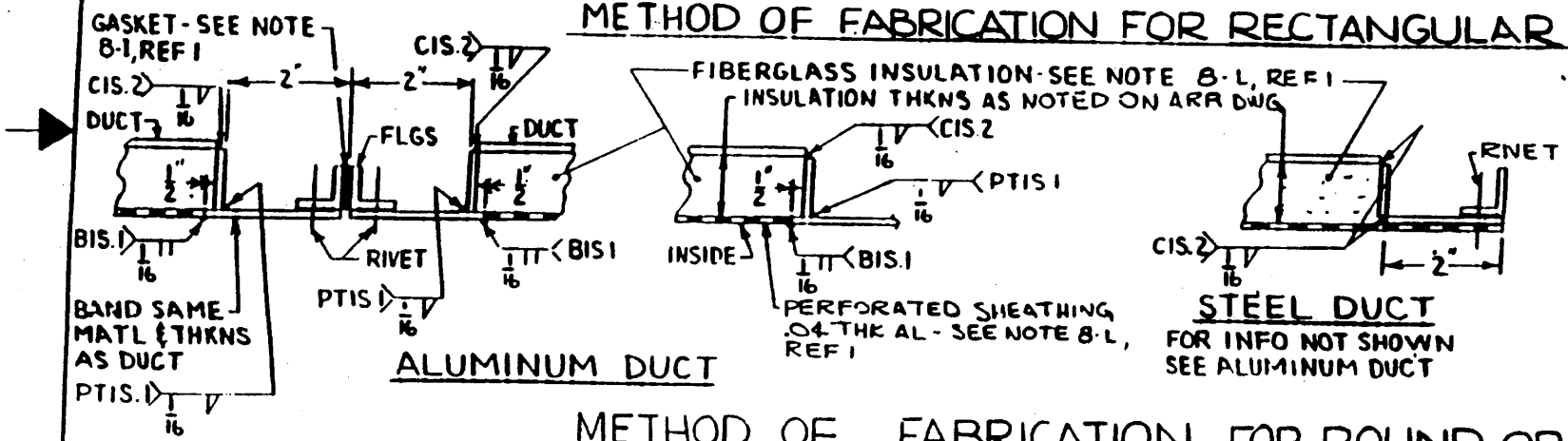

METHOD OF FABRICATION FOR ROUND OR F.O. DUCT

TYPE "A-1" (STEEL) & "A-2" (AL) ACOUSTIC INSULATION

FOR NWT DUCTS ONLY; SEE NOTE 8-L, REF. 1

DETAIL 5

DWG. NO 501 — 4870233

STANDARD DETAILS

SHEET 37 OF 14

WELDING NOTES

1. FOR ALUMINUM DUCT THICKNESS THRU .125 USE A SQUARE BUTT JOINT AND WELD FROM ONE SIDE ONLY.
2. FOR ALUMINUM DUCTS THICKER THAN .125 A SQUARE BUTT JOINT MAY BE USED IF BOTH SIDES CAN BE WELDED; OTHERWISE BEVEL EDGES AS SHOWN IN DETAIL "A" AND WELD FROM BEVELED SIDE ONLY.

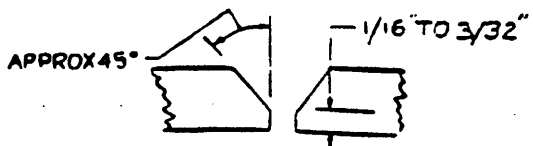

DETAIL "A"

FOR AL DUCTS THICKER THAN .125 & WELDED FROM BEVELED SIDE ONLY

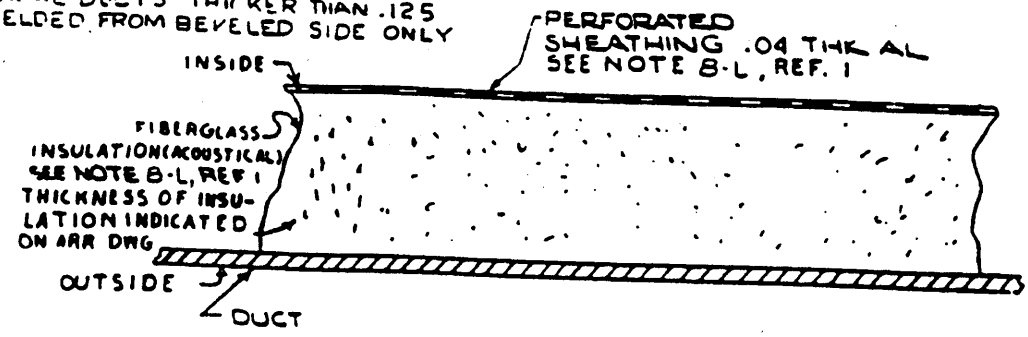

TYPICAL SECTION

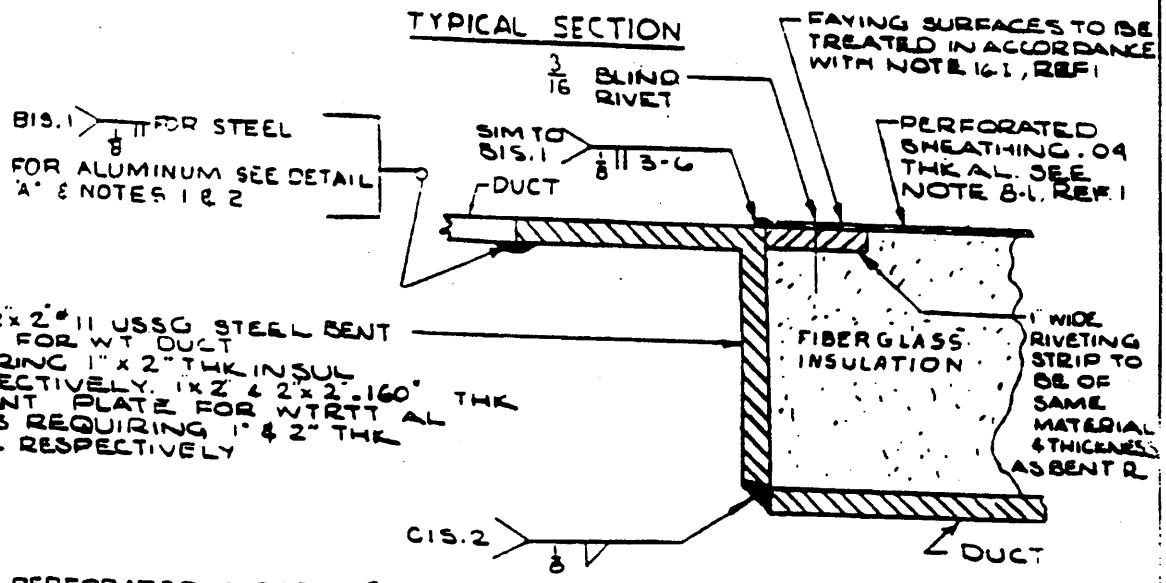

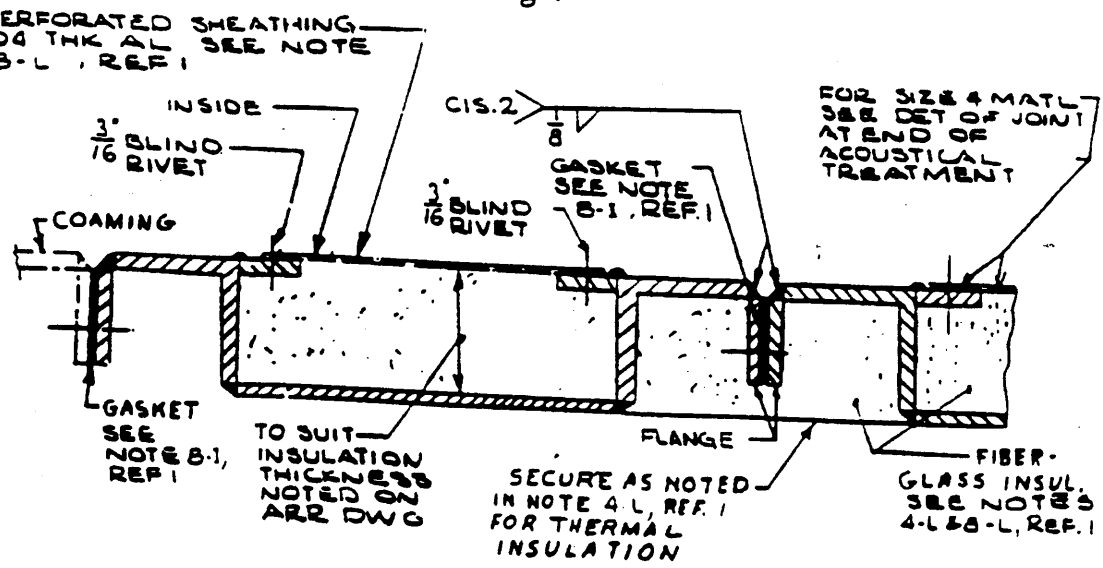

TYPE "K-1" (STEEL) & "K-2" (AL) ACOUSTIC INSULATION
WATERTIGHT TRUNK CONSTRUCTION
ACOUSTICALLY TREATED FOR ATTENUATION
SEE NOTE 8-L, REF. 1

DETAIL 5

DWG. NO. 501 — 4870233
STANDARD DETAILS
SHEET 5 OF 14

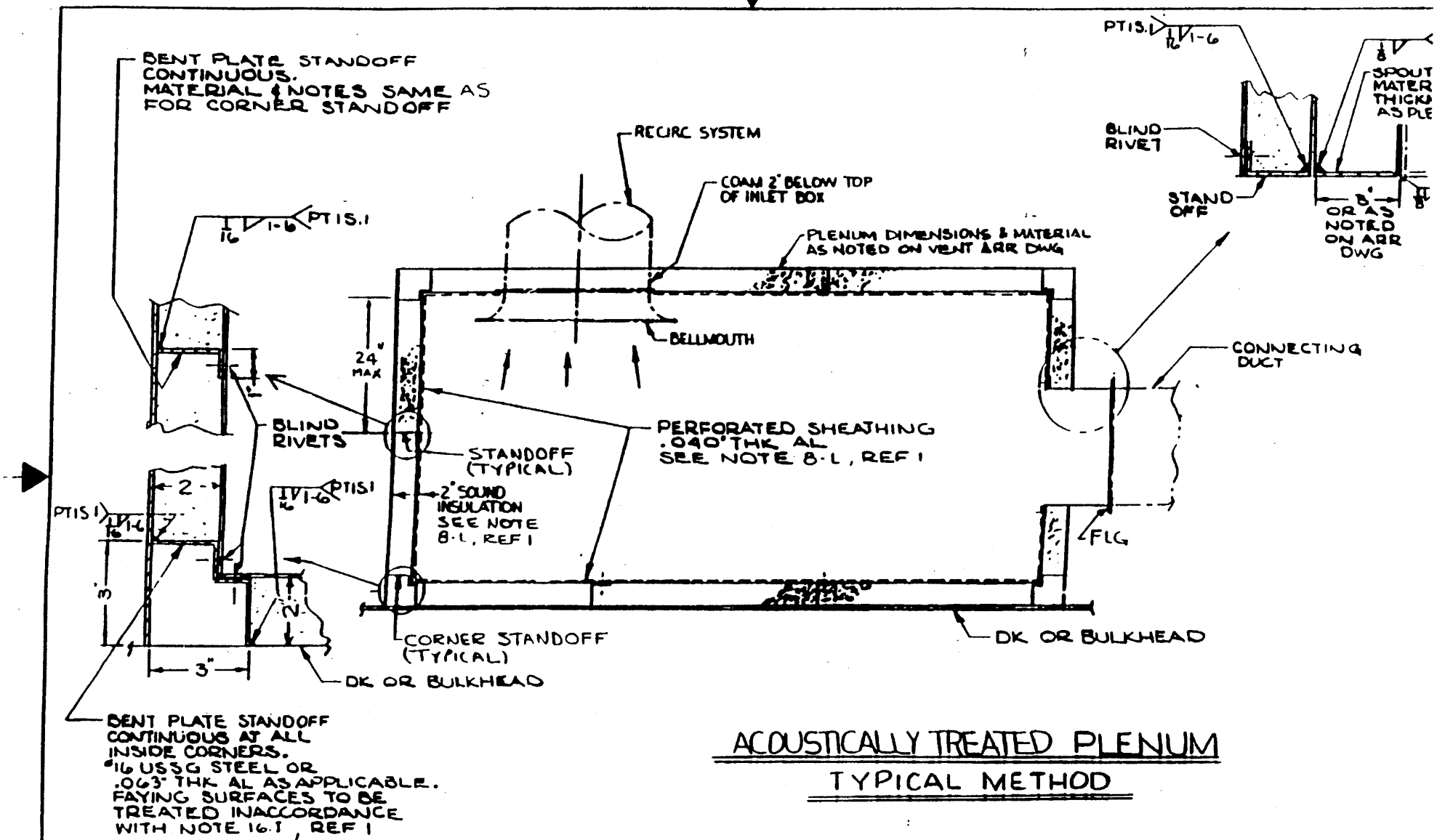

ACOUSTICALLY TREATED PLENUM

TYPICAL METHOD

DETAIL 54	
DWG. NO. 501 — 4870233	
STANDARD DETAILS	SHEET 59 OF

NOTES:
1. INSULATION TO BE TYPE "A-1" OR "A-2", DET 52
2. TERMINAL BOX TO BE SUPPORTED BY HANGERS AS NEAR TO THE TERMINAL AS POSSIBLE.
3. FOR DIMENSIONS NOT GIVEN SEE DETAIL 27, SHEET 32
4. THE ITEM SHOWN HEREON IS SUITABLE FOR GRADE "A" SHOCK APPLICATION BY EXTENSION FROM THE DIFFUSING TERMINAL TESTED AS DESCRIBED IN NN TEST REPORT 8973-9 AND APPD BY SUPSHIP LTR CVAN 68 CL/9380/94001 SER 283A-724 DATED MARCH 16, 1970. NAVAL APPROVAL OF EXTENSION IS SUPSHIP LTR DLGN 38CL/9400-1 SER 283A-2203 DATED JULY 7, 1972.

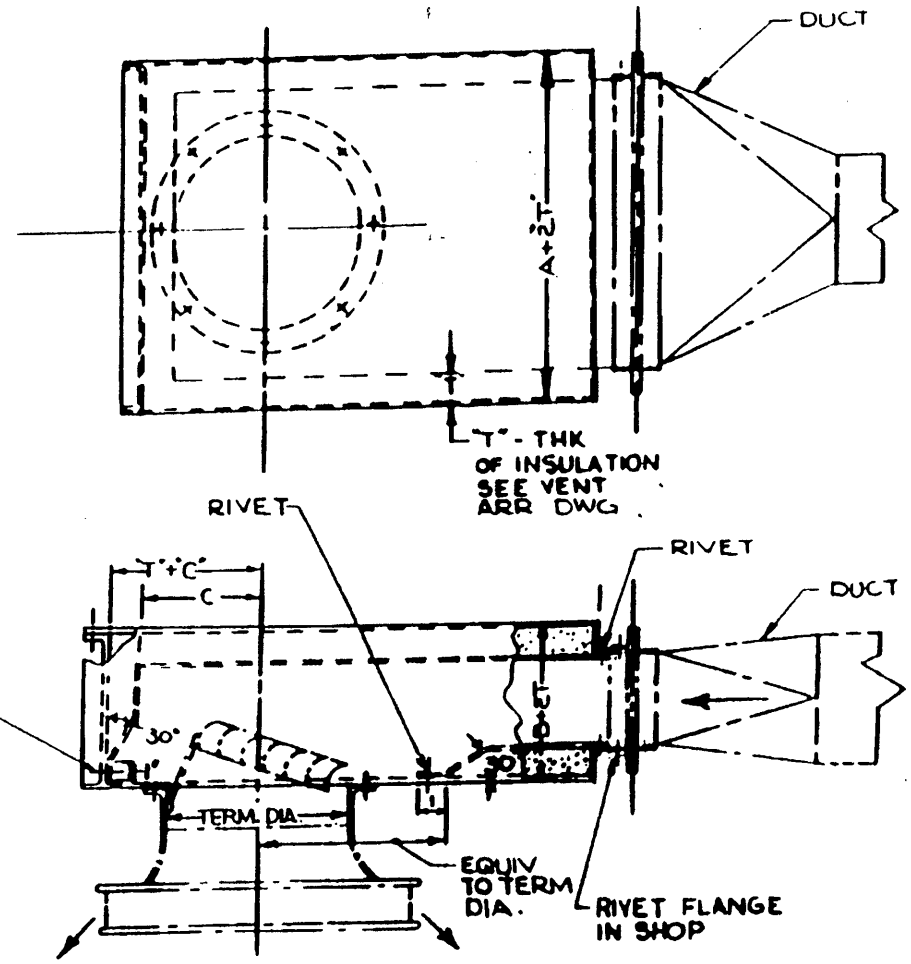

TERMINAL BOX ACOUSTICALLY TREATED FOR NAVY DIFFUSER

SUITABLE FOR GRADE "A" SHOCK

DETAIL 55

DWG NO. 501 — 4870233

STANDARD DETAILS | SH 60 OF

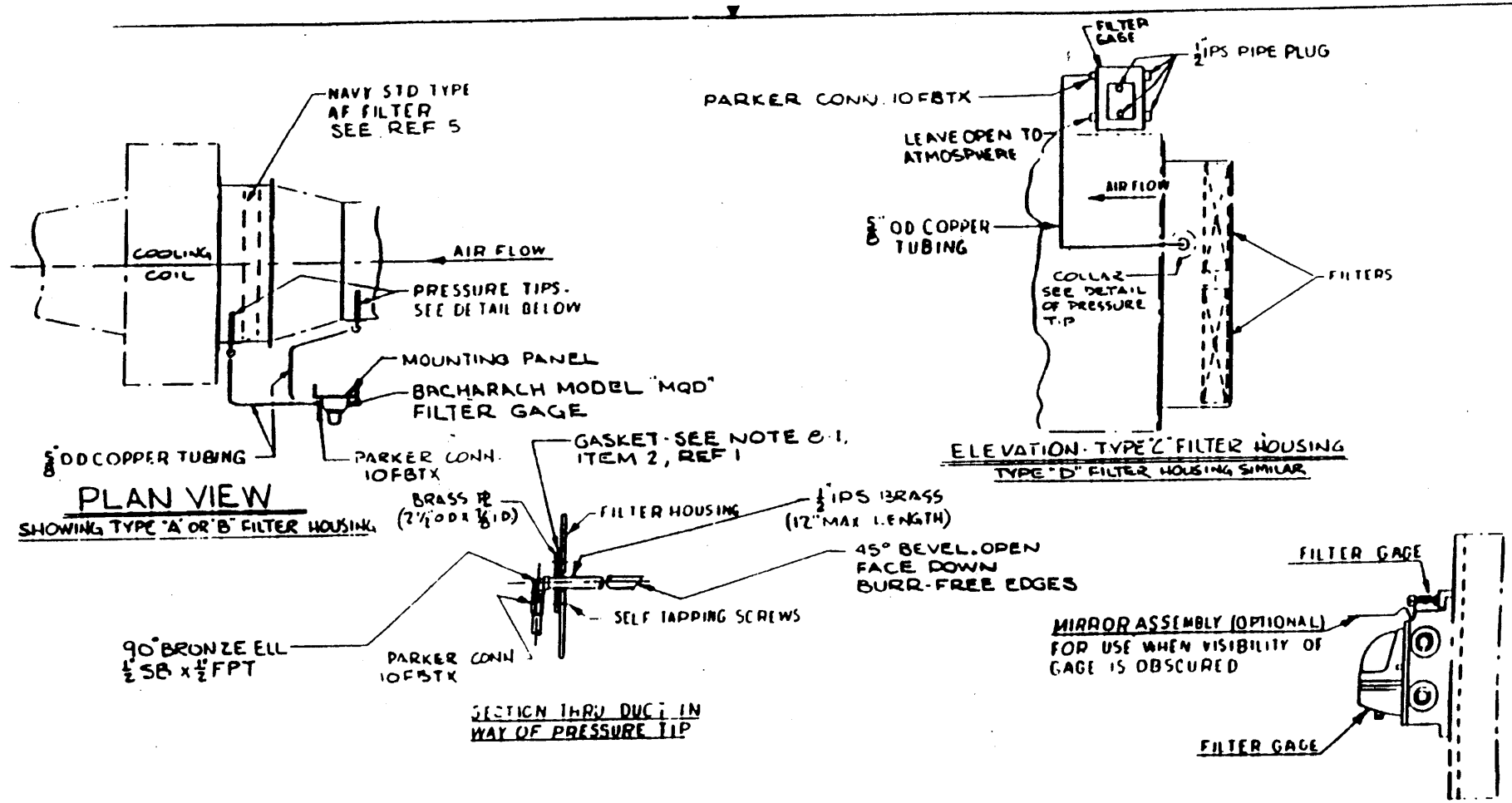
NAVY STD TYPE AF FILTER SEE REF 5
COOLING COIL
AIR FLOW
PRESSURE TIPS. SEE DETAIL BELOW
MOUNTING PANEL
BACHARACH MODEL "MQD" FILTER GAGE
5/8" OD COPPER TUBING
PARKER CONN. 10FBTX
PLAN VIEW
SHOWING TYPE "A" OR "B" FILTER HOUSING
FILTER GAGE
1/2" IPS PIPE PLUG
PARKER CONN. 10FBTX
LEAVE OPEN TO ATMOSPHERE
AIR FLOW
5/8" OD COPPER TUBING
COLLAR SEE DETAIL OF PRESSURE TIP
FILTERS
ELEVATION - TYPE "C" FILTER HOUSING
TYPE "D" FILTER HOUSING SIMILAR
GASKET - SEE NOTE 8.1, ITEM 2, REF 1
BRASS PL (2 1/2" OD x 7/8" ID)
FILTER HOUSING
1/2" IPS BRASS (12" MAX LENGTH)
45° BEVEL. OPEN FACE DOWN BURR-FREE EDGES
SELF TAPPING SCREWS
90° BRONZE ELL 1/2" SB x 1/2" FPT
PARKER CONN 10FBTX
SECTION THRU DUCT IN WAY OF PRESSURE TIP
FILTER GAGE
MIRROR ASSEMBLY (OPTIONAL) FOR USE WHEN VISIBILITY OF GAGE IS OBSCURED
FILTER GAGE
COOLING COIL
AIR FLOW
CONNECT DOWNSTREAM LINE TO ONE OF THREE POINTS. PLUG OTHER TWO WITH 1/2 IPS PLUGS
FILTER GAGE
CONNECT UPSTREAM LINE TO ONE OF THREE POINTS PLUG OTHER TWO WITH 1/2" I.P.S PLUGS
NOTE: TOTAL LENGTH OF TUBING PER GAGE NOT TO EXCEED 10 FT.
ELEVATION
MOUNTING PANEL - 6" x 6" (10USSG STL OR .160" AL) LOCATE TO SUIT WORK ON SHIP SO AS TO PROVIDE MAXIMUM VISIBILITY. 1" FLANGE ON SIDES OF MOUNTING PANEL.
NAVY STANDARD TYPE I
FILTER GAGE MOUNTING DETAILS
SEE NOTE 5.1, REF 1 AND DET. 58
ALTERNATE INSTL
DETAIL 56
DWG NO. 501 — 4870233
STANDARD DETAILS
SHEET 61 OF 14

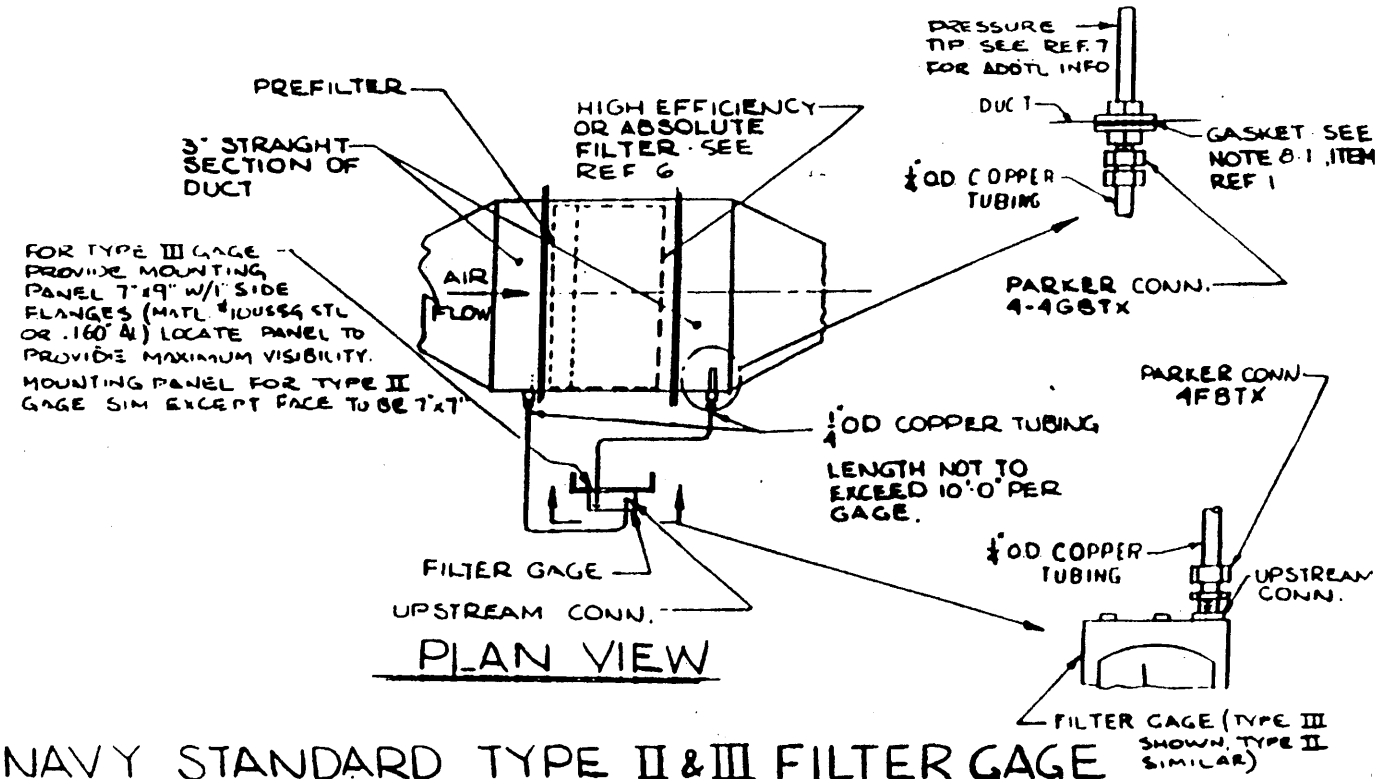

PLAN VIEW

NAVY STANDARD TYPE II & III FILTER GAGE

MOUNTING DETAILS

SEE NOTE 6.1, REF 1, AND DET. 58

ALTERNATE INSTL

DETAIL 57

DWG NO. 501 — 4870233	REV
STANDARD DETAILS	SHEET 62 OF 140

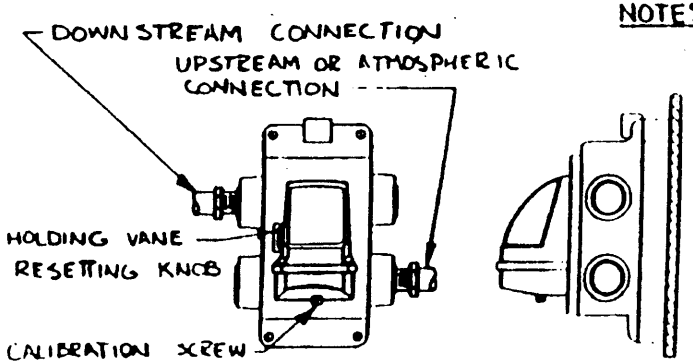

TYPE I FILTER GAGE

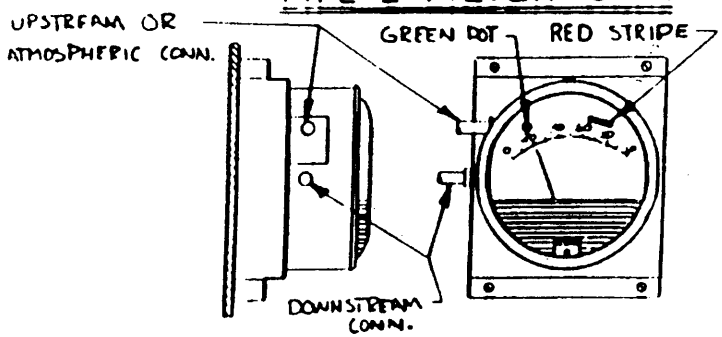

TYPE II FILTER GAGE

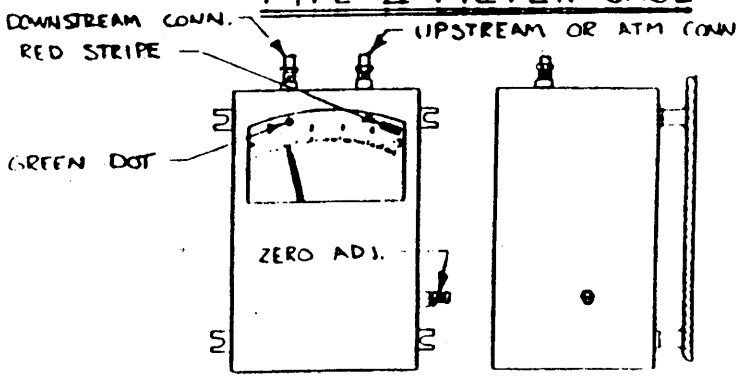

TYPE III FILTER GAGE

ALTERNATE INSTL

NOTES:

1. FILTER GAGES SHALL BE ORDERED AND INDICATED/LOCATED ON THE VENT. SYS. ARRANGEMENT DRAWING. GAGE MOUNTING AND INSTL OF STATIC PROBES SHALL BE AS SHOWN ON DET. 56 & 57.

2. FILTER GAGES SHALL BE TESTED, ADJUSTED AND MARKED AFTER INSTL ABOARD SHIP WITH VENT. SYS OPERATING IN HIGH SPEED, ALL ACCESS COVERS IN PLACE, SYS. CLEAN AND CLEAN FILTERS AND FLAME ARRESTERS IN PLACE.

3. TYPE I FILTER GAGE: THIS GAGE GIVES A VISUAL SIGNAL WHEN THE PRESS DIFF. REACHES THE VALUE AT WHICH THE GAGE IS SET. A SIGNAL VANE FLIPS TO AN UPRIGHT POSITION INDICATING A DIRTY FILTER. TYPE I FILTER GAGES ARE NOT TO BE USED ACROSS FLAME ARRESTERS. TO ADJUST GAGE, MOVE THE HOLDING VANE TO THE VERTICAL POSITION BY ROTATING THE HOLDING VANE RESETTING KNOB. THE INDICATING VANE REMAINS HORIZONTAL. TURN THE CALIBRATION SCREW UNTIL THE INDICATING VANE BARELY LEAVES THE HORIZONTAL AND FLIPS TO THE VERTICAL. MOVE THE HOLDING VANE TO THE HORIZONTAL POSITION BY ROTATING THE HOLDING VANE RESETTING KNOB. DETERMINE IF THE GAGE WILL OPERATE PROPERLY BY GRADUALLY COVERING THE UPSTREAM SIDE OF THE FILTER ASSY. UNTIL THE GAGE INDICATING VANE FLIPS UP. AT THIS POINT THE FILTER ASSY. SHOULD BE 1/2 TO 3/4 COVERED.

4. TYPE II AND III GAGES: THESE GAGES ARE A DIRECT READING DIAL TYPE. FOR ADJUSTMENT OF TYPE II AND III FILTER GAGES, ZERO THE FILTER GAGE BY DISCONNECTING THE TUBING ENTERING THE GAGE AND TURNING THE ZERO ADJUSTMENT SCREW UNTIL THE POINTER REGISTERS ZERO. RECONNECT THE PRESSURE TUBING TO THE GAGE. OPERATE THE VENT SYS. AT HIGH SPEED. MARK THE GAGE DIAL WITH A GREEN DOT AT THE POSITION INDICATED BY THE GAGE POINTER. THIS POSITION INDICATES THE CLEAN CONDITION OF THE FILTERS OR THE FLAME ARRESTERS. CALCULATE THE DIRTY CONDITION VALUE BY MULTIPLYING THE CLEAN CONDITION VALUE BY 3 FOR AIR FILTERS AND 2.5 FOR FLAME ARRESTERS. MARK THE GAGE DIAL BEYOND THIS POINT WITH A RED STRIPE TO INDICATE THE DIRTY ZONE. DETERMINE IF THE GAGE WILL OPERATE PROPERLY BY GRADUALLY COVERING THE UPSTREAM SIDE OF THE FILTER ASSY. OR FLAME ARRESTER UNTIL THE GAGE POINTER REACHES THE DIRTY CONDITION VALUE. AT THIS TIME THE FILTER ASSY. OR FLAME ARRESTER SHOULD BE 1/2 TO 3/4 COVERED.

DETAIL 58	
DWG. 501 — 4870233	REV
STANDARD DETAILS	SH 63 OF 140

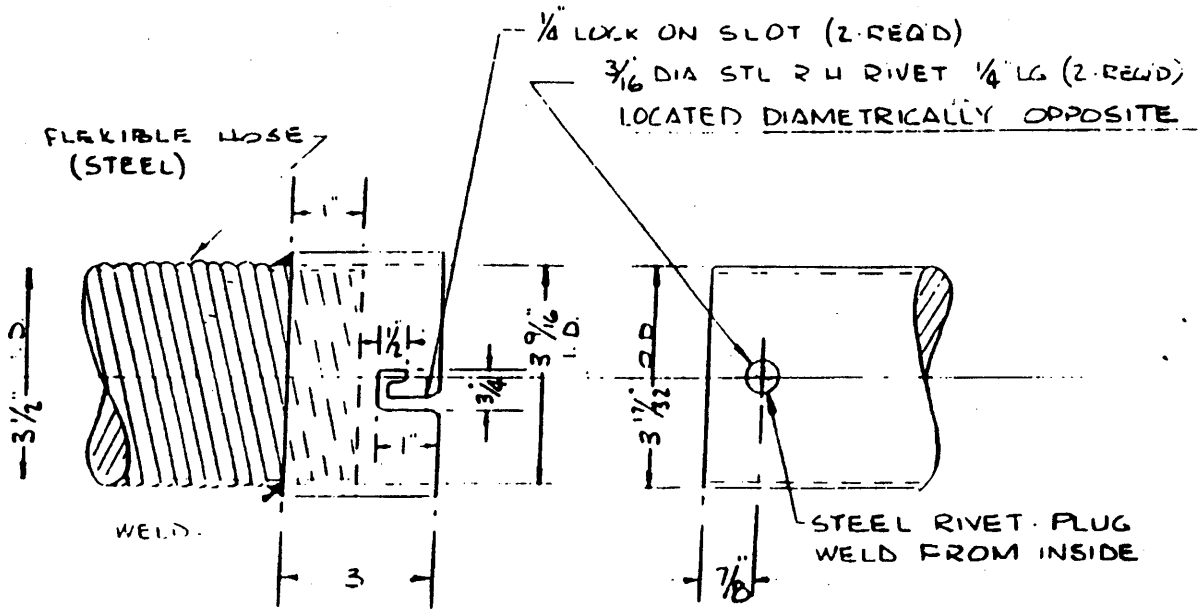

FEMALE CONNECTION
MATL .1071" THK STEEL

MALE CONNECTION
MATL .0625" THK STEEL

DETAIL OF FLEX HOSE CONNECTION

DETAIL 59

DWG NO. 501 — 4870233	REV
STANDARD DETAILS	SHEET 64 of 140

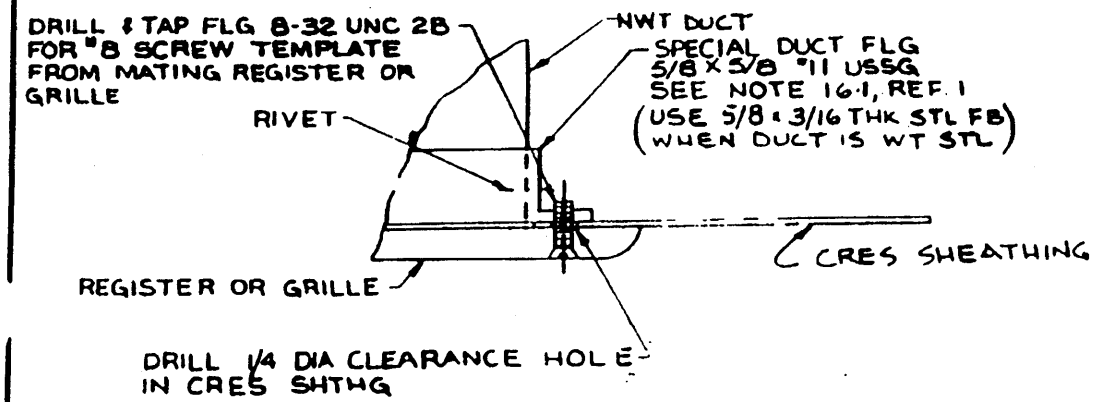

ASSY 98

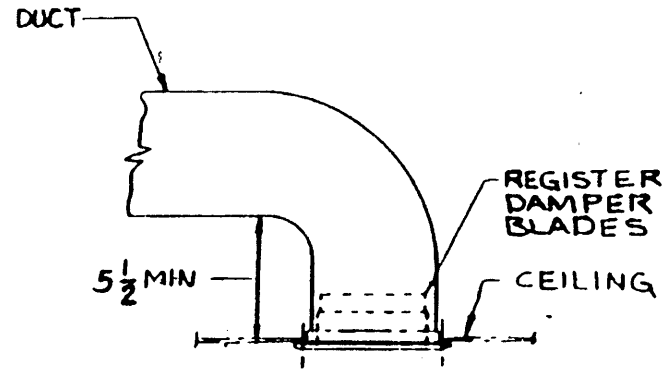

PREFERRED

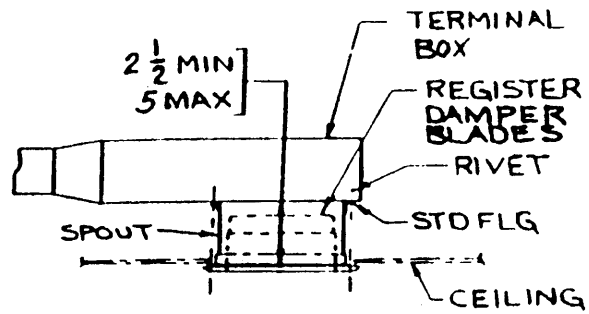

ALTERNATE

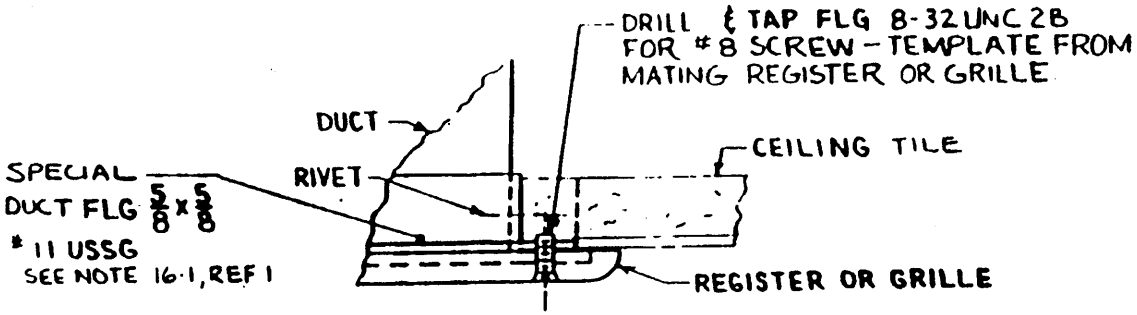

ASSY 99

KEY OPERATED REGISTERS OR GRILLES IN CEILING

DETAIL 6C

DWG NO. 501 — 4870233

STANDARD DETAILS | SHEET 65 of 14

NOTE: TYPE "E" TERMINALS SHALL BE CORROSION RESISTING STEEL, FED. SPEC. QQ-S-766
MATL. THK = .031" FOR TERMINALS LESS THAN 8" DIA.; .037" FOR TERMINALS 8" DIA. & LARGER.

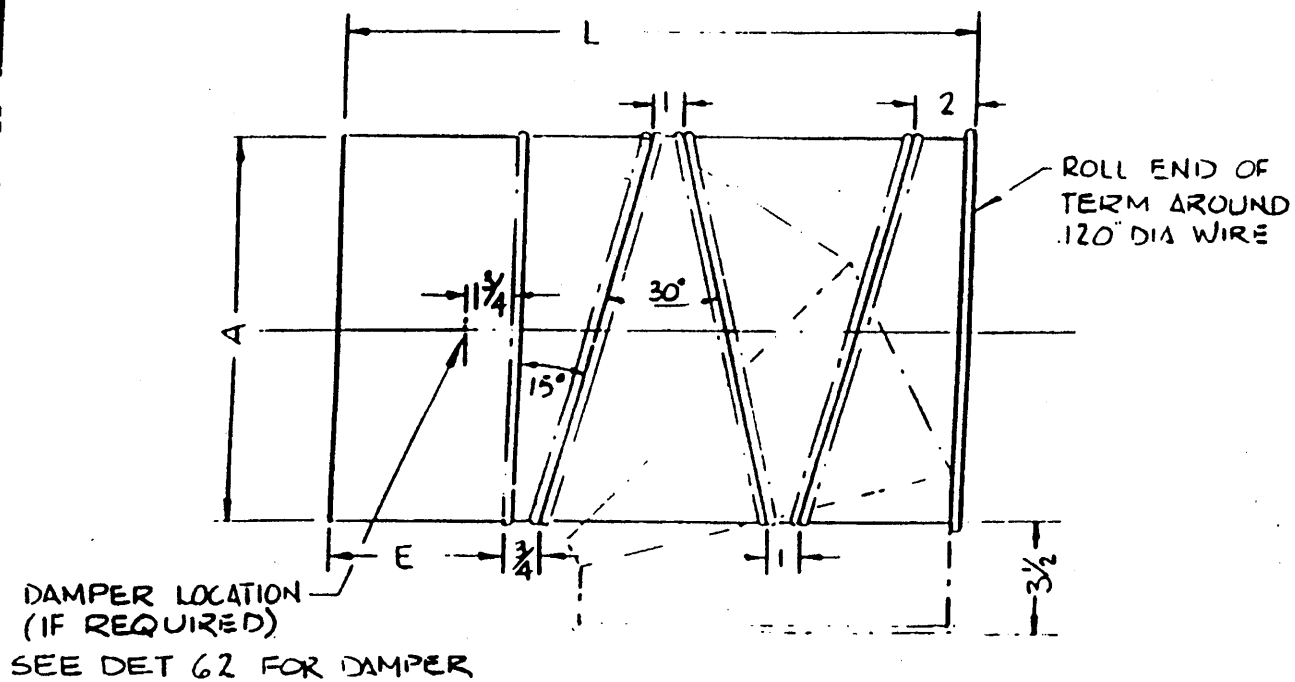

DIMENSIONS - INCHES		
INSIDE DIA. A	E	APPROX LENGTH L
3	4 1/2	11 3/4
3 1/2		12
4		12 1/2
4 1/2		13
5		13 1/4
5 1/2		13 3/4
6		14
6 1/2		14 1/2
7		15
7 1/2		15 1/4
8		15 3/4
9	6	18
10		18 3/4
11		19 1/2
12		20 1/2
13		21 1/4
17		24 1/2

TYPE "E" ADJUSTABLE BLAST TERMINAL

(BASED ON BUSHIPS STD 805-860481)

DETAIL 61

DWG NO. 501 — 4870233 REV

STANDARD DETAILS SHEET 66 OF 140

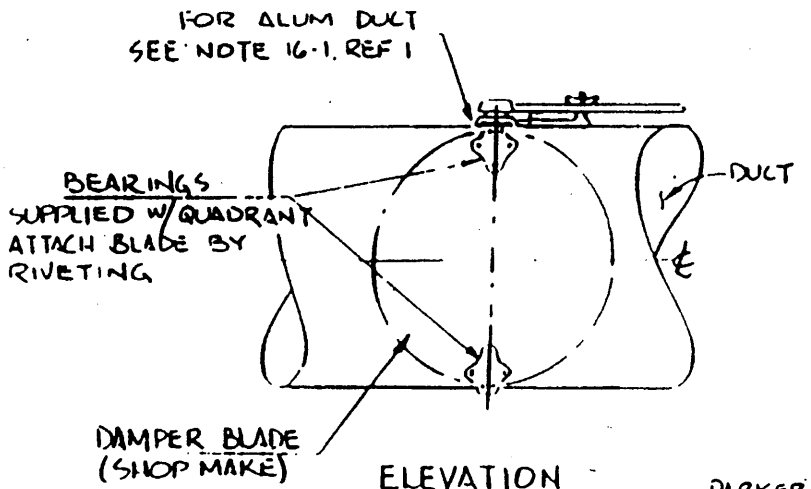

ELEVATION

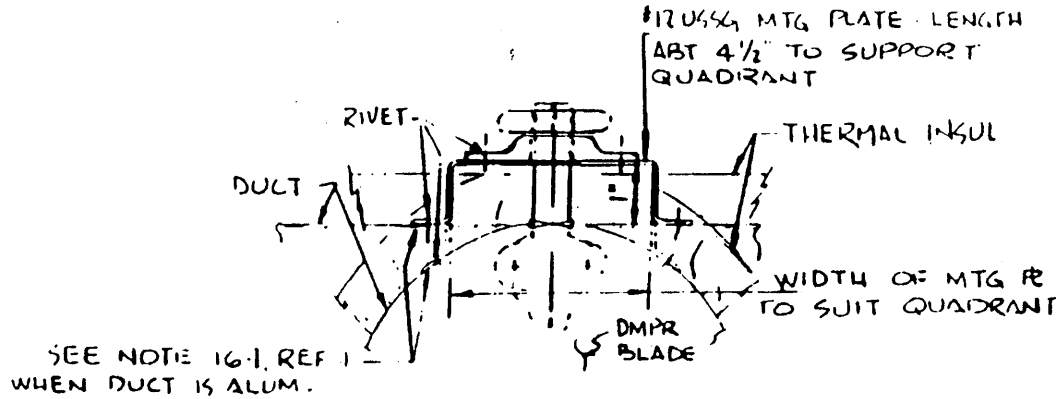

TYPICAL MOUNTING OF QUADRANT
IN WAY OF THERM INSUL.

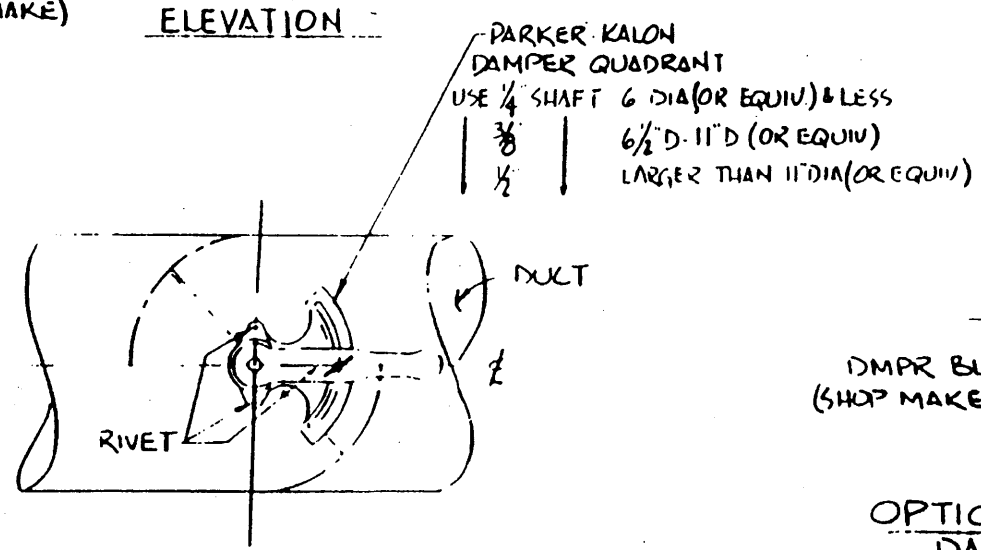

PLAN VIEW

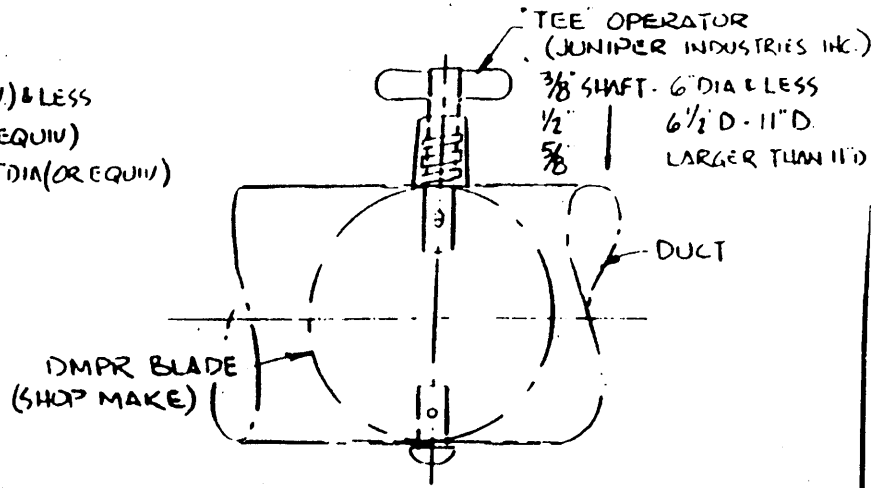

OPTIONAL 3-POSITION VOLUME
DAMPER - FOR USE WITH TYPE
"E" TERM. WHERE REQ'D.
(SIM. TO DAMPER DETAILS. DWG S3801 860481)

VOLUME DAMPER FOR NWT ROUND OR RECTANGULAR DUCT

DETAIL 62

DWG. NO. 501 — 4870233 REV

STANDARD DETAILS SHEET 67 of 140

LIST OF MATERIAL (QTY FOR 1 DMPR)				
PC NO	DESCRIPTION	QTY	MATERIAL	MATL SPEC
1	BACK PIN	1	BRASS	QQ-B-637
2	ADJUSTING SCREW	1	↓	↓
3	COLLAR	1	STEEL	QQ-S-775
4	NUT, HEX. HEAD	1	↓	MIL-B-857
5	JAM NUT, HEX. HD.	1	↓	↓
6	#10-24 SCREWS	4	↓	FF-S-92
7	DAMPER BLADE	1	↓	QQ-S-775

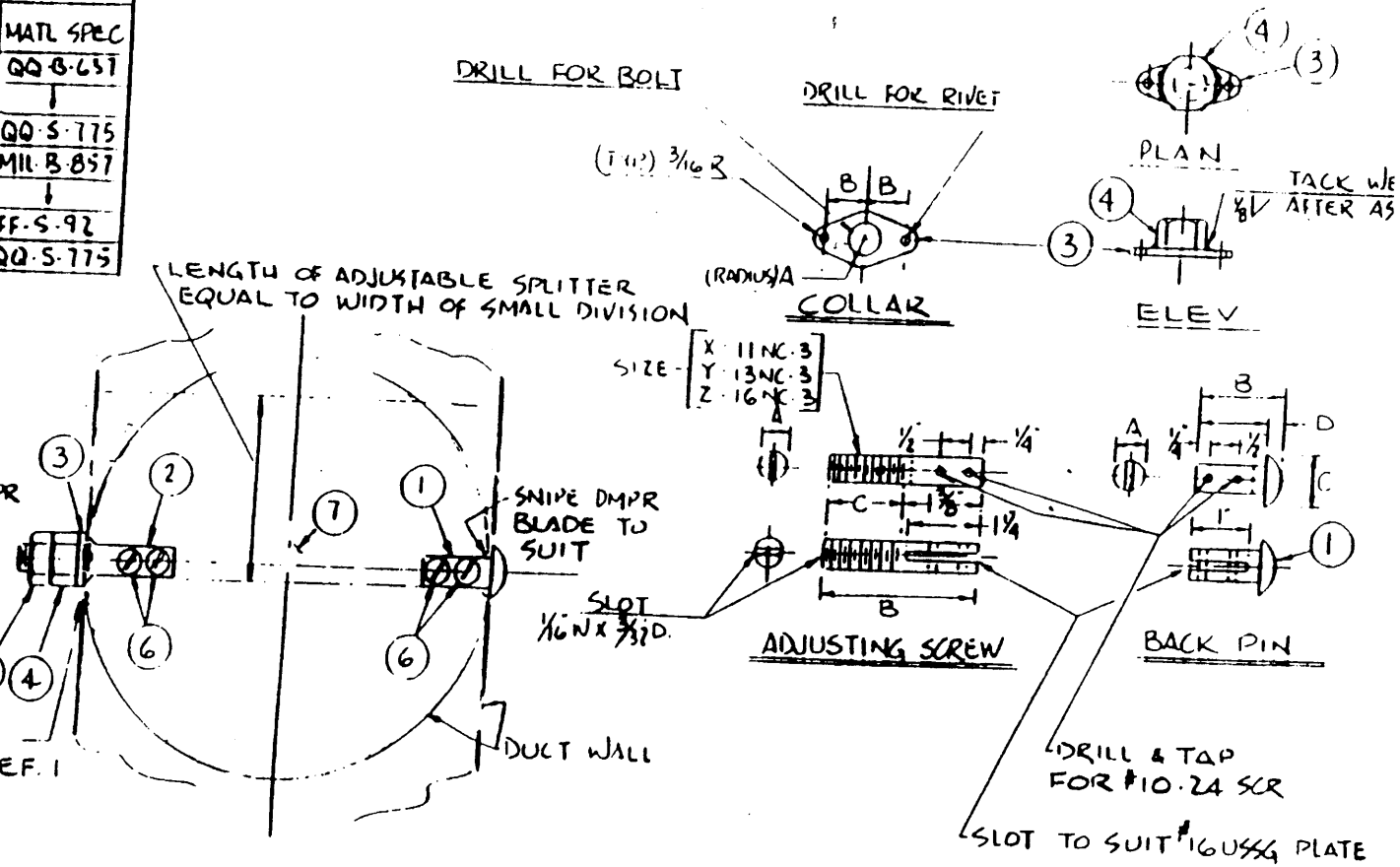

* SIZE : DUCT DIM. IN PLANE OF DMPR
X : 11" THRU 17"
Y : 6½" THRU 10½"
Z : 6" AND UNDER

TABLE OF DIMENSIONS						
P.NO	SIZE	DESCRIPTION	A	B	C	D
1	X	BACK PIN	5/8	1½	1	5/16
	Y	↓	½	1 7/16	7/8	¼
	Z	↓	3/8	1 3/8	3/4	3/16
2	X	ADJ. SCREW	5/8	2 1/16	1 1/16	-
	Y	↓	½	2 3/8	1 1/8	-
	Z	↓	3/8	2 1/16	1 1/16	-
3	X	COLLAR	9/16	7/8	-	-
	Y	↓	7/16	3/4	-	-
	Z	↓	3/8	11/16	-	-

BALANCING DAMPER/SPLITTER

DETAIL 63
DWG. NO. 501 — 4870233 REV
STANDARD DETAILS SHEET 68 OF 140

NOTE · SEE DETAIL 65 FOR DIMENSIONS OF VANES FOR 30°, 45°, 60° & 90° TURNS

* "N" DENOTES NUMBER OF VANES

PHYSICAL DATA DIMENSIONS (IN)					
WIDTH	45° TURN				
A	B	C	N*	D	E
3	1½	1½	2	1	3.2
4			3		4.3
5			4		5.4
6			5		6.5
7			6		7.6
8			7		8.7
9			8		9.7
10			9		10.8
11	3		4	2	11.9
12			5		13.0
13			6		14.1
14			7		15.2
15			7		16.2
16			8		17.3
17			8		18.4
18			9		19.5
19			9		20.6
20			9		21.6
21			10		22.7
22			10		23.8
23			11		24.9
24			11		26.0
25			12		27.1
26			13		28.1
27			13		29.2
28			14		30.3
29			14		31.4
30			15		32.5

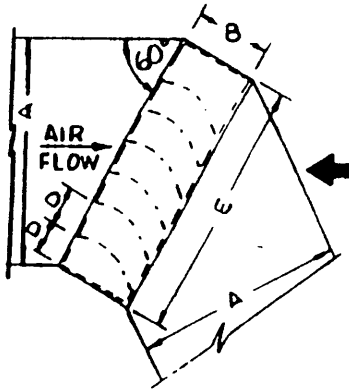

60° TURN

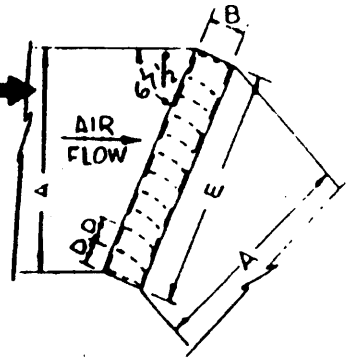

45° TURN

PHYSICAL DATA DIMENSIONS (IN)					
WIDTH	60° TURN				
A	B	C	N*	D	E
3	1½	1½	3	¾	3.5
4			5		4.6
5			6		5.8
6			8		6.9
7			9		8.1
8	3		4	1½	9.2
9			5		10.4
10			6		11.5
11			7		12.7
12			7		13.8
13			8		15.0
14			8		16.2
15			9		17.3
16			10		18.5
17			11		19.6
18	6		5	3¼	20.8
19			8		21.9
20			6		23.1
21			8		24.2
22			8		25.4
23			7		26.5
24			8		27.7
25			8		28.9
26			8		30.0
27			8		31.2
28			8		32.3
29			9		33.5
30			8		34.6

ALTERNATE CHANNEL FRAME FOR FLANGE ATTACHMENT TO DUCT CONTINUATIONS - SEE DIE NO. S-189, S-190 & S-191, DET. 65

VANE ASSEMBLY FRAME SECURED INSIDE DUCT WALL (TYPICAL)

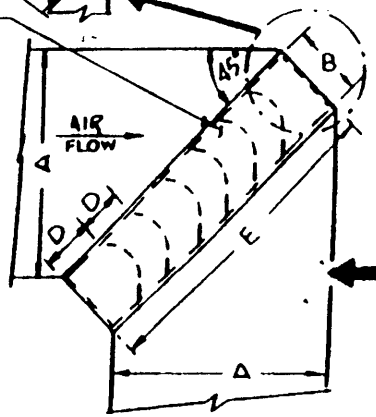

90° TURN

PHYSICAL DATA DIMENSIONS (IN.)					
WIDTH	90° TURN				
A	B	C	N*	D	E
3	1½	1½	4	¾	4.2
4			6		5.7
5			8		7.1
6			10		8.5
7			12		9.9
8	3		6	1½	11.3
9			7		12.7
10			8		14.1
11			9		15.5
12			10		17.0
13			11		18.4
14			12		19.8
15			13		21.2
16			14		22.6
17	6		7	2½	24.0
18			8		25.5
19			8		26.9
20			8		28.3
21			9		29.7
22			8		31.1
23			10		32.5
24			8		33.9
25			11		35.4
26			8		36.8
27			12		38.2
28			8	2¼	39.6
29			13		41.0
30			8		42.4

PHYSICAL DATA DIMENSIONS (IN)					
WIDTH	30° TURN				
A	B	C	N*	D	E
3	1½	1½	1	1½	3.1
4			1		4.1
5			2		5.2
6			3		6.2
7			3		7.3
8			4		8.3
9			5		9.3
10			5		10.4
11			6		11.4
12			7		12.4
13			8		13.5
14			8		14.5
15			9		15.5
16			10		16.6
17	3		4	3	17.6
18			5		18.7
19			5		19.7
20			5		20.7
21			6		21.8
22			6		22.8
23			6		23.8
24			7		24.9
25			7		25.9
26			8		26.9
27			8		28.0
28			8		29.0
29			9		30.0
30			8		31.1

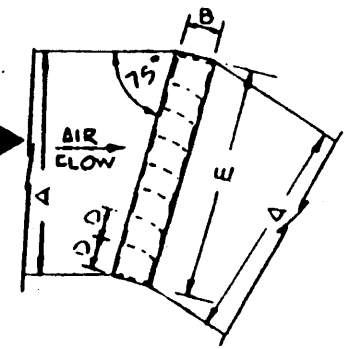

30° TURN

NAVY STANDARD VANED DUCT TURNS

DETAIL 64

DWG NO. 501 — 4870233

STANDARD DETAILS

SHEET 69 OF 145

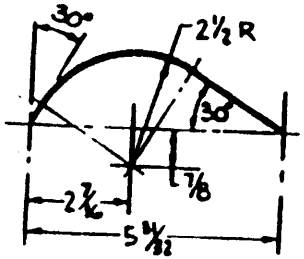

DIE NO. S-179
6"-90° VANE

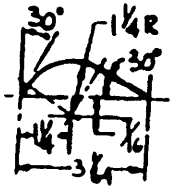

DIE NO. S-180
3"-90° VANE

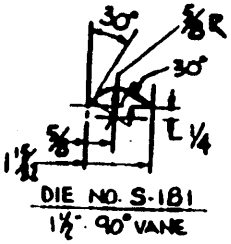

DIE NO. S-181
1½"-90° VANE

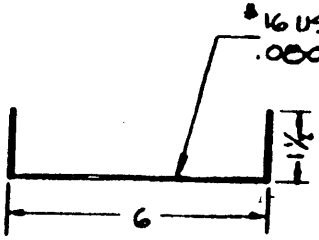

DIE NO. S-189

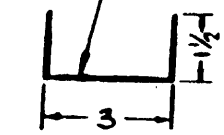

DIE NO. S-190

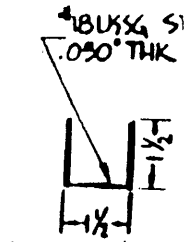

DIE NO. S-191

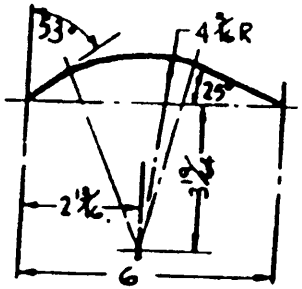

DIE NO. S-182
6"-60° VANE

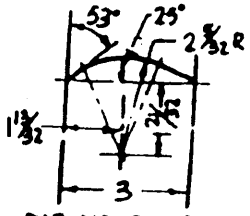

DIE NO. S-183
3"-60° VANE

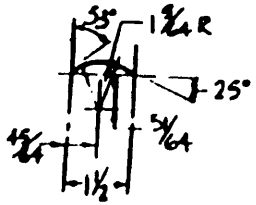

DIE NO. S-184
1½"-60° VANE

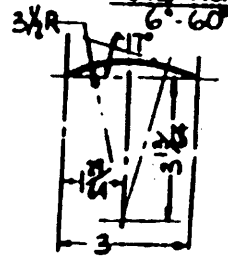

DIE NO. S-185
3"-45° VANE

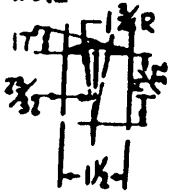

DIE NO. S-186
1½"-45° VANE

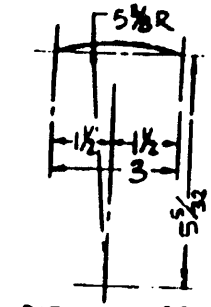

DIE NO. S-187
3"-30° VANE

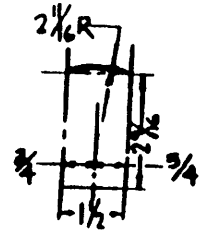

DIE NO. S-188
1½"-30° VANE

NOTES:

1. MATERIAL FOR VANES & FRAMES SHALL BE AS FOLLOW
   3" & 6" VANES - #16 USSG STL OR .080" THK ALUM.
   1½" VANES - #18 USSG STL OR .050" THK ALUM.
2. LEADING AIR EDGES OF VANES SHALL BE ROUNDED SMOOTH AND FREE OF IRREGULARITIES.
3. VANES SHALL BE CAREFULLY POSITIONED AND SECURED ONTO THE FRAME BY TACK WELDIN
4. VANE ASSEMBLIES FRAMED FOR INTERNAL INSTALLATION SHALL BE EITHER RIVETED OR TACK WELDED TO DUCT WALL. POINTS OF ATTACHMENT SHALL BE SPACED TO CREATE A RIGID INSTALLATION TO PREVENT NOISE RESULTING FROM VIBRATION.

NAVY STANDARD VANES FOR VANED TURNS

DETAIL 65

DWG NO. 501 — 4870233

STANDARD DETAILS | SH 70 OF 140

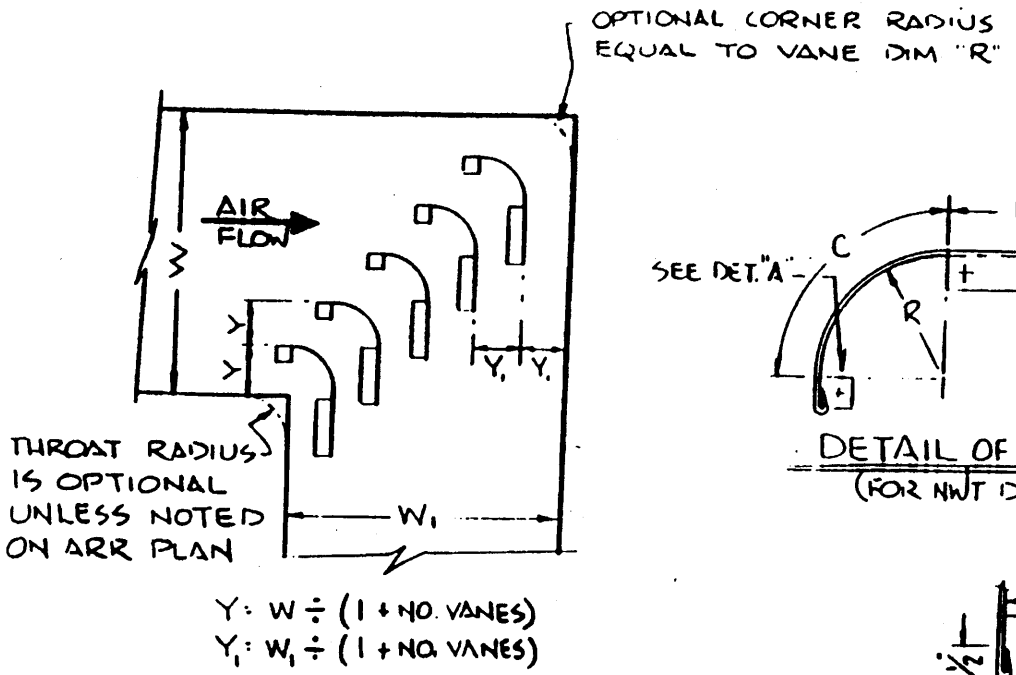

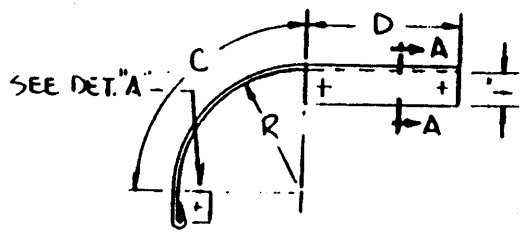

DETAIL OF VANE
(FOR NWT DUCT)

TABLE OF DIMENSIONS				
DIMENSIONS IN INCHES				NO. VANES
W OR W1	R	C	D	
5 TO 6½	2	3 3/16	3	2
7 TO 11	2½	3 15/16	3½	3
12 TO 17	3	4 3/4	3½	5
18 TO 24	4	6 5/16	4	8
25 TO 35	5	7 15/16	4½	10
36 & LARGER	7	11	5	11

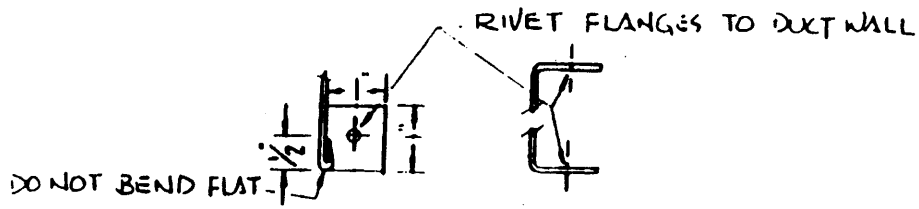

DETAIL "A" SECTION "A-A"

NOTES:

1. VANES SHALL BE FABRICATED OF SAME MATERIAL & THICKNESS AS DUCT IN WHICH VANES ARE INSTALLED.
2. VANES FOR WT/WELDED DUCT SHALL BE FABRICATED TO SAME DIMENSIONS AS SHOWN ABOVE, EXCEPT FLANGES FOR RIVET ATTACHMENT SHALL BE OMITTED. VANES SHALL BE ATTACHED TO DUCT WALL BY WELDING ⅛/½-4 LEADING AIR EDGES OF VANES SHALL BE ROUNDED SMOOTH.
3. DIMENSIONS & NO. OF VANES FOR EXPANDING OR CONTRACTING VANED ELBOWS SHALL BE BASED ON THE SMALLEST "W" OR "W1" DIMENSION.

ALTERNATE VANED TURN FOR RECTANGULAR DUCT

DETAIL 66

DWG. NO. 501 — 4870233 REV

STANDARD DETAILS | SHEET 21 OF 46

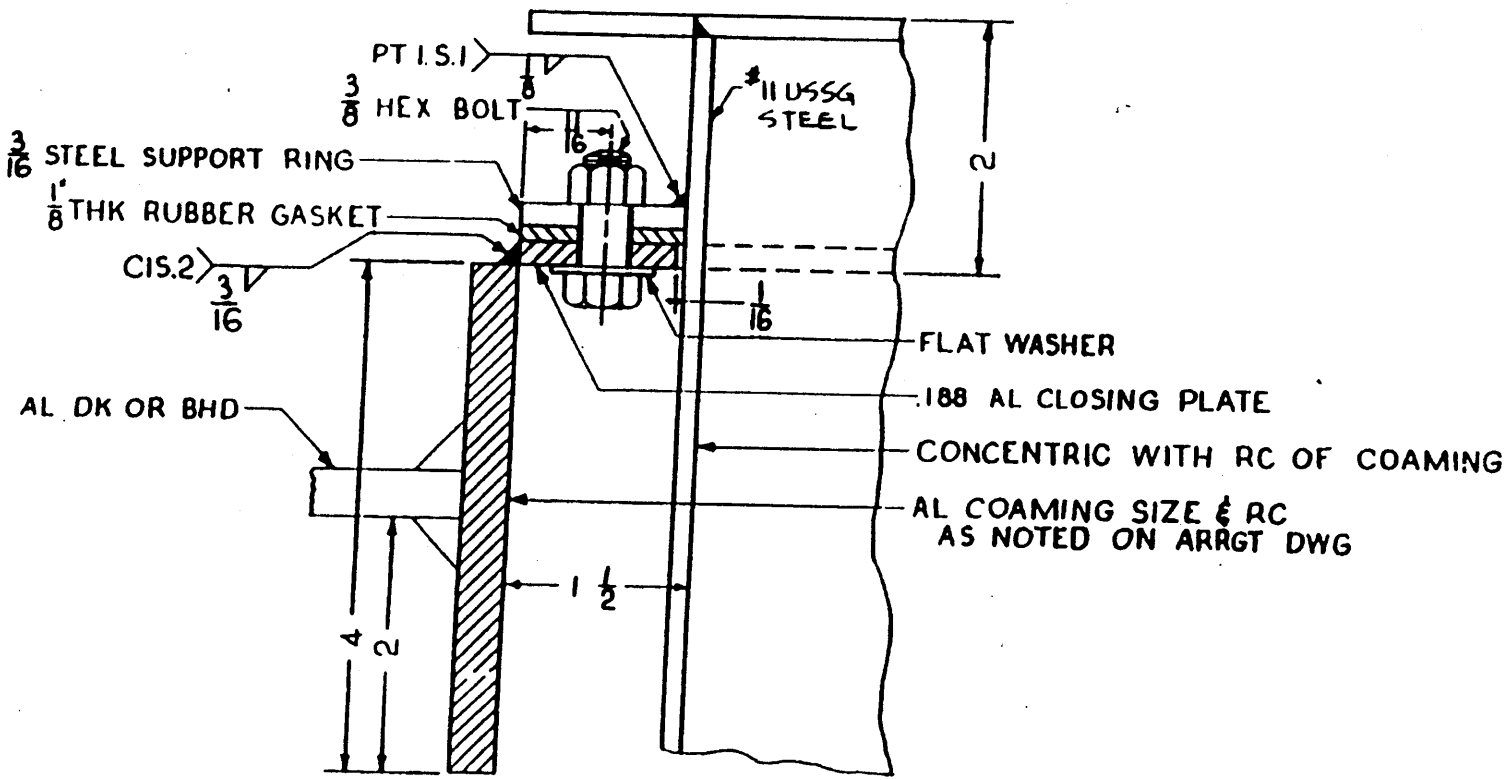

METHOD OF PENETRATING ALUMINUM DECK OR BHD WITH STEEL DUCT

DETAIL 67

DWG. NO 501 — 4870233 | REV

STANDARD DETAILS | SHEET 72 of 140

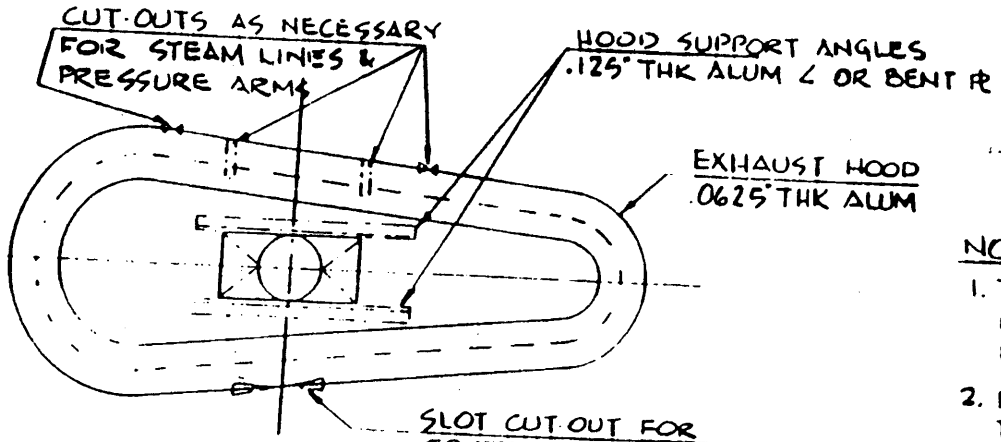

PLAN VIEW

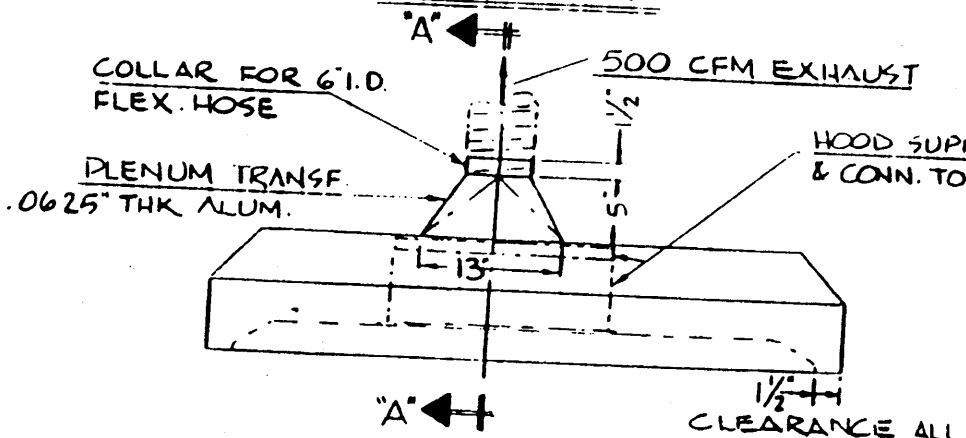

ELEVATION

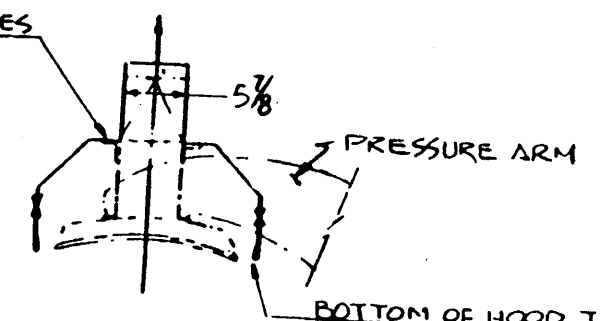

SECTION "A-A"

NOTES:

1. TYPICAL HOOD ILLUSTRATED IS DESIGNED TO EXHAUST 500 CFM FROM LAUNDRY PRESS HEAD.
2. EXACT SIZE & SHAPE OF HOOD IS TO BE DETERMINED FROM TEMPLATE DIMENSIONS OF PRESS HEAD
3. CUT-OUTS REQUIRED IN HOOD TO BE NEATLY FIT FOR MIN. CLEARANCE

TYPICAL EXHAUST HOOD FOR LAUNDRY PRESS

ALTERNATE INSTL

DETAIL 68

DWG NO. 501 — 4870233 REV

STANDARD DETAILS SHEET 73 OF 140

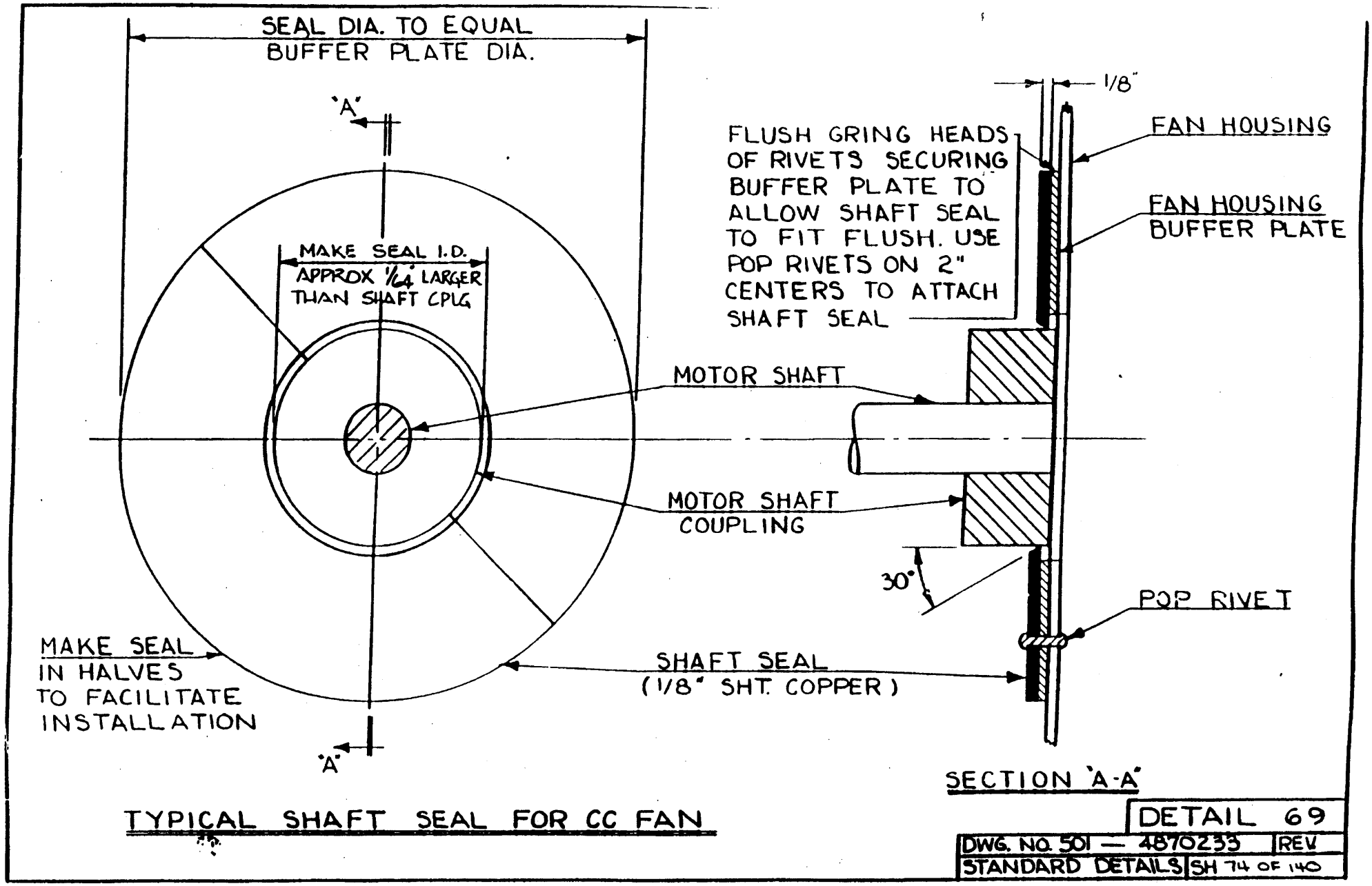

TYPICAL SHAFT SEAL FOR CC FAN

DETAIL 69	
DWG. NO. 501 — 4870233	REV
STANDARD DETAILS	SH 74 OF 140

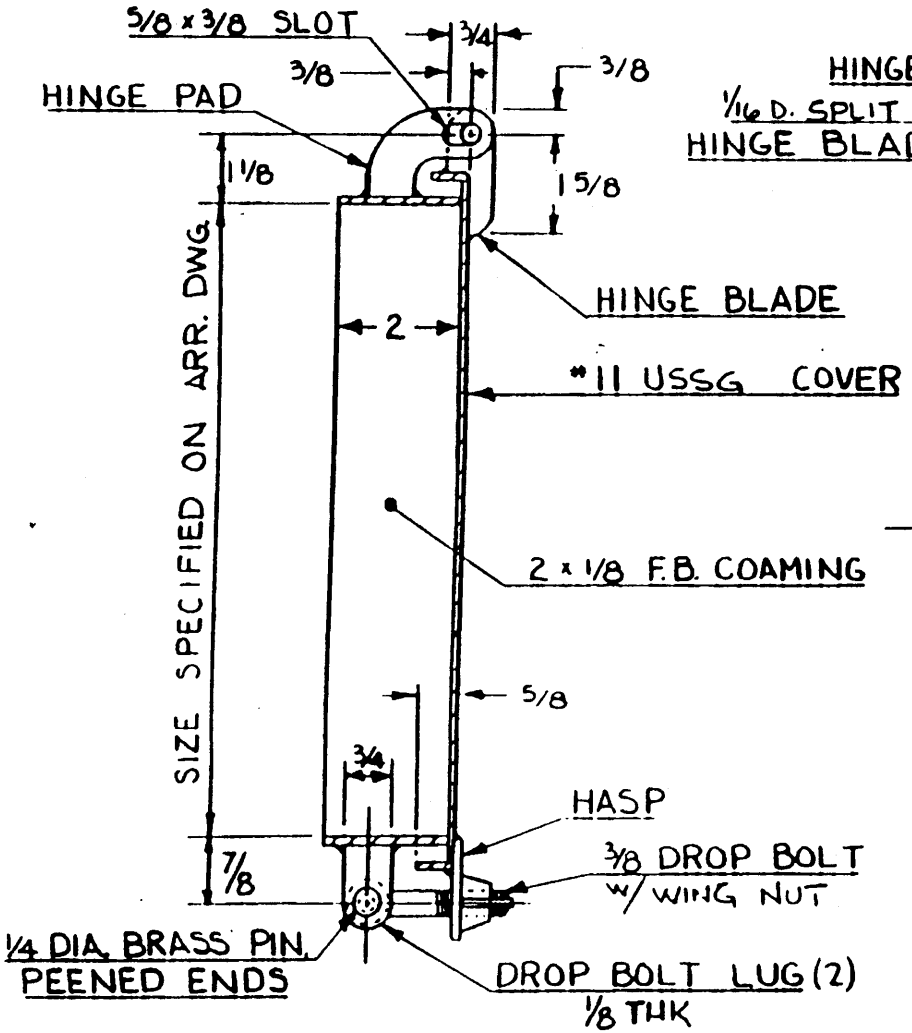

SECTION 'A-A'

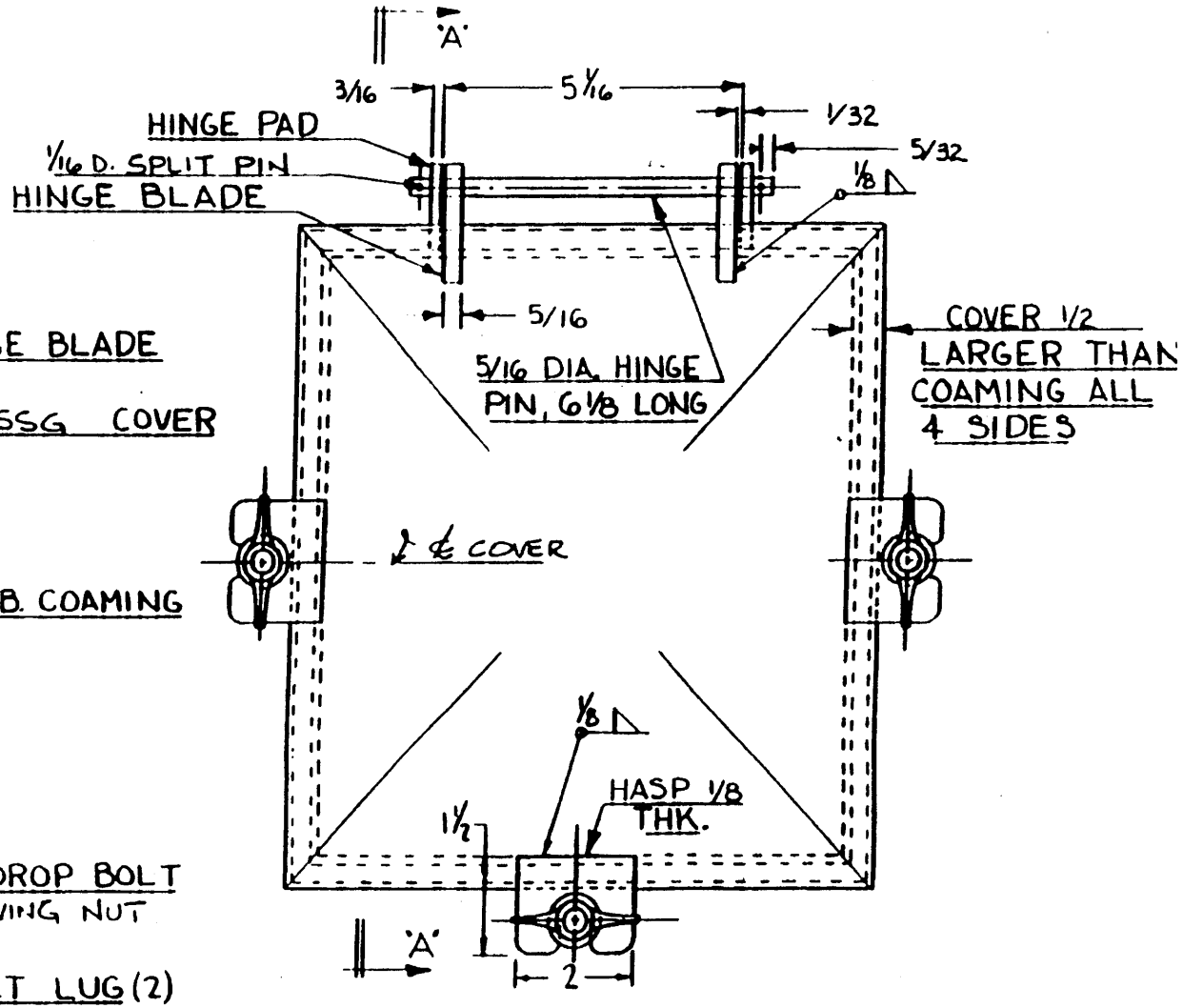

TYPICAL N.W.T. VENT CLOSURE

DETAIL 70

DWG. NO. 501 — 4870233 REV

STANDARD DETAILS SHEET 73 OF 140

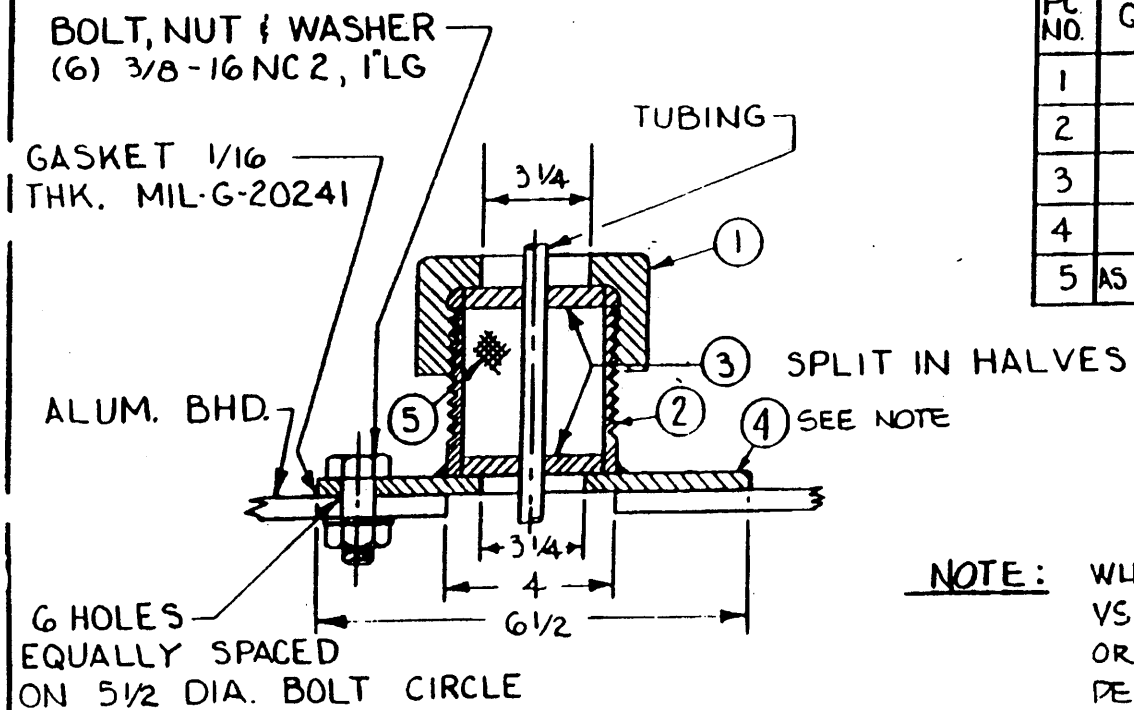

BILL OF MATERIAL				
PC. NO.	QTY.	NAME OF PIECE	MATL	SPEC
1	1	PIPE CAP 3 1/2 IPS.	M. I.	WW-P-521
2	1	SLEEVE, 3 1/2 IPS x 2 1/2 LG	STEEL	WW-P-404
3	2	WASHER, 3 1/2 OD. x 1/4 ID. x 1/4 THK	↓	MIL-S-22698
4	1	FLANGE, 6 1/2 OD (3 1/2 ID. x 1/4 THK	↓	↓
5	AS REQD	PACKING 7/8" D ROPE	FLAX. FIBER	COML.

3 1/4

NOTE: WHEN BOUNDARY PENETRATED IS STEEL VS ALUMINUM, CUT 3 1/4 DIA HOLE IN BHD OR DK AND WELD PC. 2 DIRECTLY TO PLATE PENETRATED. (PC. 4 NOT REQ'D.)

TYPICAL DETAIL
STUFFING BOX FOR CAPILLARY TUBE PASSING THRU AL DK OR BHD

DETAIL 71

DWG. NO. 501 — 4870235 | REV

STANDARD DETAILS | SHEET 76 OF 146

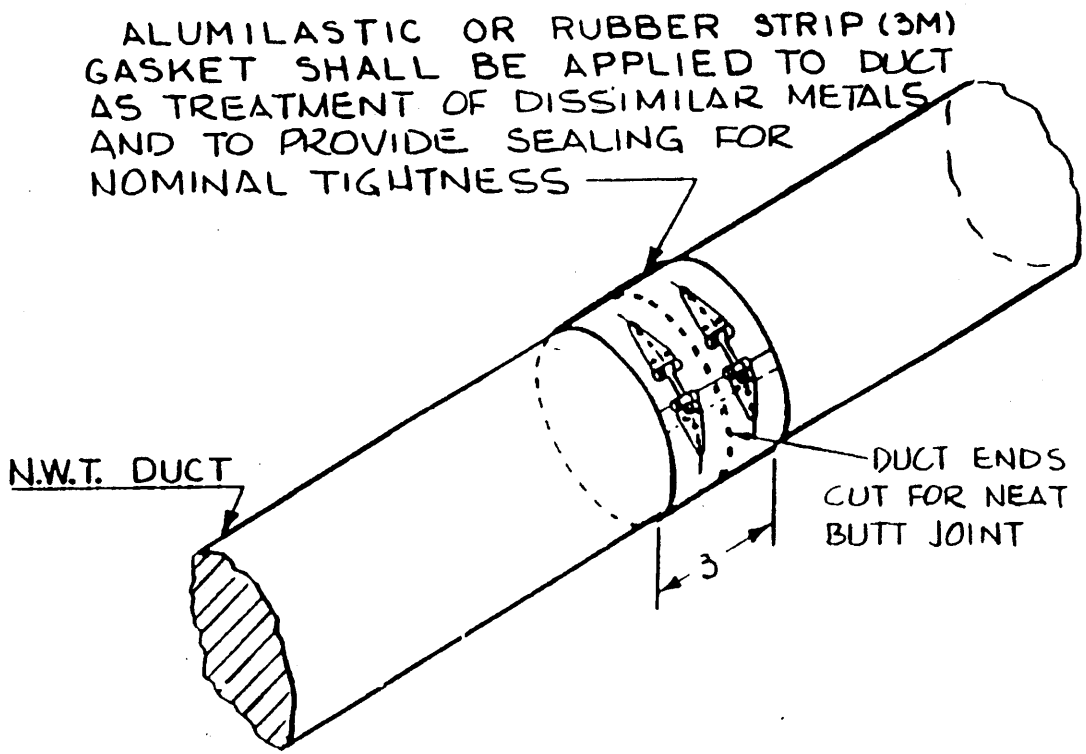

NOTES:

1. BANDED SLEEVE CONNECTORS MAY BE USED FOR DUCT SIZES 3" - 10" DIA. (1/2" INCREMENTS).
2. CONNECTOR SHALL BE AEROQUIP NO. 10 T-BOLT, MULTIPLE TAKE-UP, OR EQUAL
3. THE ITEM SHOWN HEREON IS SUITABLE FOR GRADE "A" SHOCK APPLICATIONS AS APPROVED BY NAVSEA LETTER 56Y11/KHN/LAS, 9510, SER 344 DATED 27 AUGUST 1982.

BANDED SLEEVE CONNECTOR FOR N.W.T ROUND DUCT

SEE GENERAL NOTE 6-C(C)

DETAIL 72	
DWG. NO. 501 — 4870233	REV.
STANDARD DETAILS	SH 71 OF 140

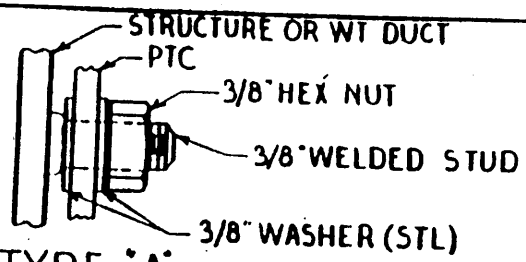

TYPE "A"
(MOUNTING TO NON-INSULATED STRUCTURE)
SCALE: 12" = 1 FT

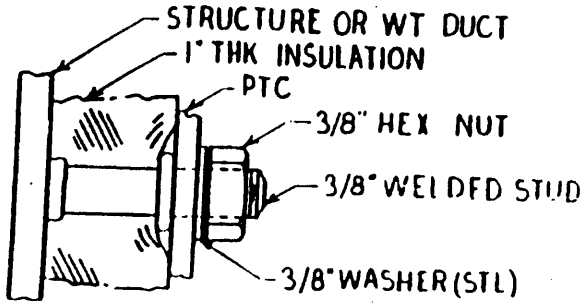

TYPE "B"
(MOUNTING TO STRUCTURE WITH 1" INSULATION)
SCALE: 12" = 1 FT

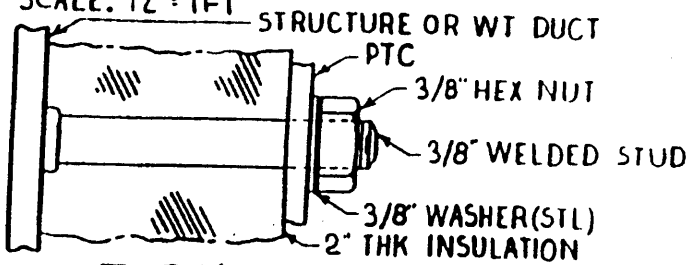

TYPE "C"
(MOUNTING TO STRUCTURE WITH 2" INSULATION)
SCALE: 12" = 1 FT

NOTES:
1) PORTABLE TEST COVERS DETAILED HEREON ARE FOR USE DURING COMPARTMENT AND/OR DUCT AIR PRESSURE TESTING TO A MAXIMUM OF 2 PSI
2) ALL COVERS SHALL BE H32 AL., .188 THICK
3) EACH PLATE SHALL BE DRILLED TOGETHER WITH THE FLANGE AGAINST WHICH IT SHALL BE INSTALLED FOR TESTING.
4) ALL CORNERS AND EDGES ARE TO BE GROUND SMOOTH.
5) WHERE REQUIRED DUE TO CONGESTION, THE PTC STOWAGE LOCATION SHALL BE DIMENSIONED ON THE ARRANGEMENT PLAN. DIMENSIONS SHALL BE TO THE GEOMETRIC CENTER OF THE PTC
6) THE NUMBER OF ALUMINUM OR STEEL WELDING STUDS REQUIRED FOR STOWAGE OF PTC's SHALL BE IN ACCORDANCE WITH THE TABLE BELOW:

MOUNTING TYPE	ALUMINUM STUDS		STEEL STUDS	
	PTC AREA (IN.²)	NO. OF STUDS	PTC AREA (IN.²)	NO. OF STUDS
A	LESS THAN 560	2	LESS THAN 800	2
	560 - 1100	4	800 - 1600	4
	1100 - 1700	6	—	—
B	LESS THAN 290	2	LESS THAN 420	2
C	LESS THAN 150	2	LESS THAN 210	2
	150 - 290	4	210 - 420	4
	290 - 440	6	420 - 630	6

7) THE LOCATIONS OF WELDING STUDS USED FOR STOWAGE OF THE PTC SHALL BE DETERMINED AT INSTALLATION AND SHALL BE LOCATED SYMETRICALLY ON OPPOSITE SIDES OF THE PTC.
8) WELDING STUDS SHALL BE INSTALLED IN ACCORDANCE WITH WRP 11.1
9) THE STOWAGE METHODS DETAILED HEREON HAVE BEEN APPROVED FOR GRADE "A" SHOCK, BASED ON SHOCK TEST REPORT 7454-N, BY SUPSHIP LTR DLGN 38CL/9400-1 SER 283-3151, DATED 1 NOV 1974.
10) WELDING STUDS AND NUTS SHALL BE ALUMINUM OR STEEL TO SUIT MATERIAL TO WHICH ATTACHMENT IS MADE.

DETAIL OF PORTABLE TEST COVER & STOWAGE

DETAIL 73

DWG NO. 501 — 4870233 | REV.
STANDARD DETAILS | SH 78 OF 140

LIST OF MATERIAL

ITEM NO.	DESCRIPTION	MATERIAL	MATERIAL SPEC	STOCK NUMBER	REMARKS
1	MATL FOR DRAIN SUMP, .100 THK	AL	QQ-A-250/8		
2	TBG, 3/4 IPS, 1.05 OD X .065 THK	COPPER	MIL-T-24107		SMLS
3	ELBOW, 3/4 IPS, 90 DEG SB	BRONZE	MIL-F-1183		TYPE "A" W/PINSTD RING
4	UNION, 3/4 IPS, SB	BRONZE	MIL-F-1183		TYPE "A" W/PINSTD RING
5	COUPLING, 3/4 IPS THDS	STEEL	WW-P-521		TYPE I
6	COUPLING, 3/4 IPS THDS	AL	MIL-F-52618/1		
7	PIPE PLUG 3/4 IPS, S.B.	BRONZE	WW-P-460		
8	CLAMP, WORMDRIVE, 1-1/4 DIA	CRES	COMML		TYPE "T"
9	PIPE NIPPLE, 3/4 IPS, SCHED 40	AL	QQ-A-250/8		LENGTH TO SUIT
10	TYGON TUBING, 1 ID X 1-1/2 OD	PLASTIC	COMML		LG TO SUIT, NORTON PLASTICS (S-50-HCD XTAL CLR)
11	MATERIAL FOR DRAIN SUMP	GALVS	QQ-S-775		
12	PIPE NIPPLE, 3/4 IPS, SCHED 40	GALVS	QQ-S-775		LENGTH TO SUIT

LIST OF MATERIAL FOR LOW POINT DUCT AND PLENUM DRAINS

DETAIL 74

DWG NO. 501-4870233 REV

STANDARD DETAILS

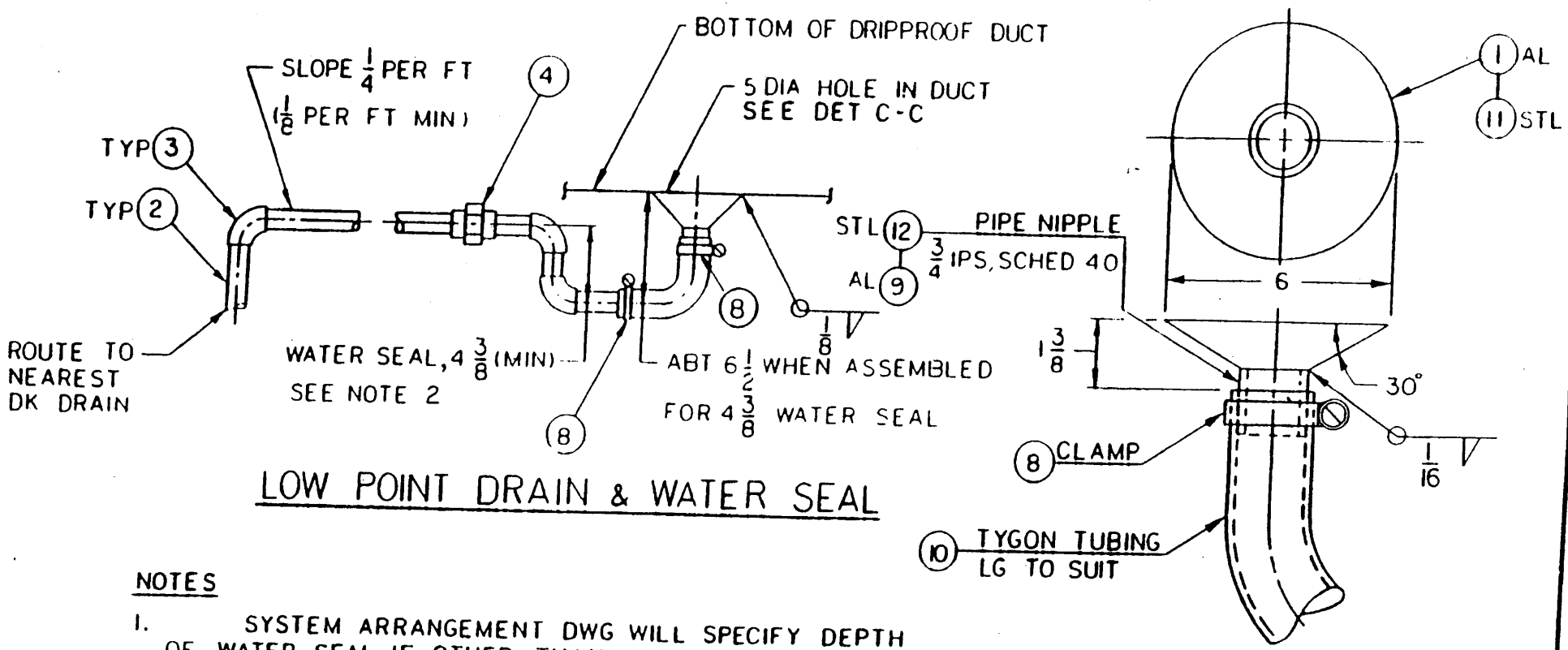

LOW POINT DRAIN & WATER SEAL

DET C-C
SUMP & DRAIN CONN

NOTES

1. SYSTEM ARRANGEMENT DWG WILL SPECIFY DEPTH OF WATER SEAL IF OTHER THAN 4-3/8 MIN DEPTH REQUIRED.
2. DRAIN ARRANGEMENT SHOWN ABOVE IS TYPICAL; IF HEADROOM IS LIMITED, WATER SEAL MAY BE LOCATED ELSEWHERE.

LOW POINT DUCT AND PLENUM DRAINS
PREFERRED INSTL

DETAIL 75

DWG. NO. 501-4870233	REV
STANDARD DETAILS	SHEET 80 OF 140

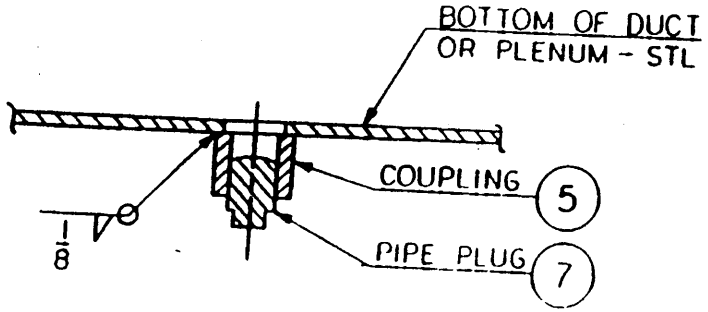

DUCT OR PLENUM DRAIN PLUG
STL

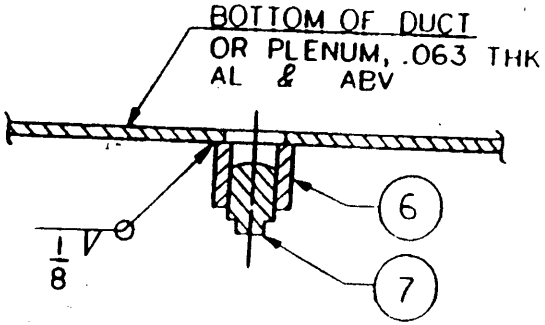

DUCT OR PLENUM DRAIN PLUG
AL

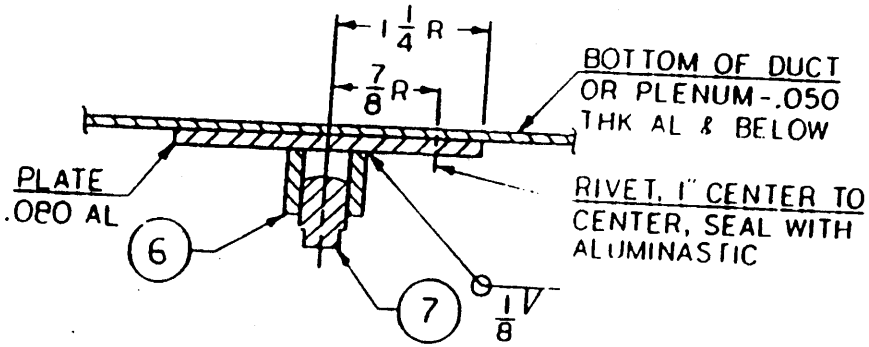

DUCT OR PLENUM DRAIN PLUG
AL

LOW POINT DUCT AND PLENUM DRAINS
PREFERRED INSTL

NOTE: ABOVE DRAIN PLUG IS INTENDED FOR DUCTWORK OR PLENUMS WHICH MAY OCCASIONALLY BE SUBJECT TO SEAWATER OR RAIN ENTRY.

DETAIL 76	
DWG NO 501-4870233	REV
STANDARD DETAILS	SHEET 51 OF 140

NOTES

1. TYPE W & L THERMOSTATS ARE PROVIDED WITH 10 FEET OF TUBING. TYPE R THERMOSTAT WITH 25 FEET OF TUBING.
2. INSTALL PROTECTIVE GUARDS OVER THERMO TUBING (SEE SH 91) IN AREAS WHERE TUBING MAY BE SUBJECT TO DAMAGE. EXAMPLE: FORK LIFT WORKING AREAS, CARGO HANDLING AREAS, BOMB ASSEMBLY AREA.
3. INSTALLING SHOP SHALL TAKE CARE WHEN ROUTING THERMOSTAT TUBING ABOARD SHIP. SEVERE BENDS OR KINKS CAN CLOSE OR RUPTURE THE TUBING, CAUSING THE THERMOSTAT TO BECOME INOPERATIVE.
4. SHOP MAY SUBSTITUTE ALUMINUM MATERIAL IN LIEU OF STEEL WHEN ALUMINUM SHIP STRUCTURE ARE ENCOUNTERED. MATERIAL SHALL BE IN ACCORDANCE WITH THE FOLLOWING SPECIFICATIONS:
   ALUMINUM SHEET MATERIAL, QQ-A-250/8 5052-H32
   ALUMINUM BARS & SHAPES, QQ-A-200/8 6061-T6
5. BEFORE RIVETING MOUNTING PLATE TO DUCT, APPLY A MEDIUM COAT OF SEALANT TO BACK OF PLATE. (SEALANT EQUAL TO SCOTCH SEAL NO. 2084 (3M CO) STK NO 8030-01-023-4535)
6. CAPS SHALL BE CUT ON ONE SIDE TO FACILITATE INSTALLATION OF THERMO TUBING.
7. SLEEVES LOCATED BELOW WATER TIGHTNESS LEVEL MUST BE WELDED ON BOTH SIDES AS SHOWN. SLEEVES ABOVE THE WATER TIGHTNESS LEVEL NEED ONLY BE WELDED ON ONE SIDE.

THERMOSTATIC CONTROL DETAILS

NOTES

LIST OF MATERIAL

ITEM NO	DESCRIPTION	MATERIAL	MATERIAL SPEC	STOCK NUMBER	REMARKS
1	MATL FOR SUPPORT CLIPS, .035 THK	STEEL	ASTM 569		
2	MATL FOR THERMOSTSAT MOUNTS, .074 THK	STEEL	ASTM 569		
3	TAPE, DOUBLE BACK, 1" WIDE	VINYL	-	9320-00-449-0807	
4	MATL FOR BHD THIMBLE, .108 THK GALV	STEEL	QQ-S-775		
5	MATL FOR THERMO BULB MOUNT, .125 THK	STEEL	ASTM 569		
6	MOLDED NEOPHRENE CAP	RUBBER	MIL-R-6855		CLASS II, 6015 DUROMETER
7	MATL FOR PROTECTIVE GUARD, .125 THK	AL	QQ-A-250/8		
8	MATL FOR MOUNTING PLATE, .1875 THK	STEEL	ASTM 569		
9	PERFORATED AL ALLOY SHEET, .04 THK	AL	MIL-A-12875		TYPE II, CLASS B
10	HANGER, 1 X 1 X 1/8 ANGLE	STEEL	MIL-S-22698		
11	ADHESIVE, METAL TO METAL, "SCOTCH GRIP"	—	MIL-C-4003		NO.847, 3M CO. OR EQL
12	FLAT BAR, 3/4 X 1/4	STEEL	MIL-S-22698		
13	FLAT BAR, 1 X 1/8	STEEL	MIL-S-22698		
14	BAR STOCK, 1-1/4 DIA	CRES	QQ-S-763		CLASS 304, COND A
15	BLIND RIVET, 3/16 DIA	STEEL	MIL-R-7885		LENGTH TO SUIT MATL
16	PAN HEAD SCREW, 6-32 NC2	STEEL	FF-S-92		ZINC PLATED
17	PAN HEAD SCREW, 10-24 NC2	STEEL	FF-S-92		ZINC PLATED
18	HEX NUT, 10-24 NC2	STEEL	FF-S-92		ZINC PLATED
19	SELF TAPPING SCREW NO. 10	STEEL	FF-S-107		ZINC PLATED
20	PAN HEAD SCREW, 1/4-20 NC2	STEEL	MIL-S-1222		ZINC PLATED
21	HEX NUT, 1/4-20 NC2	STEEL	MIL-S-1222		ZINC PLATED
22	PAN HEAD BOLT, 5/16-18 NC2	STEEL	MIL-S-1222		ZINC PLATED
23	HEX NUT, 5/16-18 NC2	STEEL	MIL-S-1222		ZINC PLATED
24	BOSS, 5/8 LG, 5/16-18 NC2	STEEL	MIL-S-20166		
25	CLAMP HOSE, WORM DRIVE, 9/16 WIDE	CRES	MIL-C-6985		
26	SLEEVE, 3-1/2 IPS SCHED 40, 2-1/4 LG	STEEL	MIL-P-15692		GRADE B, TYPE A
27	SLEEVE, 3-1/2 IPS SCHED 40, 2-1/4 LG	AL	WW-T-70015		H32 TEMPER
28	GASKET, 1/8 THK	RUBBER	MIL-R-900		

THERMO CONTROL DETAILS
LIST OF MATERIAL

DETAIL 78

DWG NO. 501-4870233 REV

STANDARD DETAILS SHEET 83 OF 140

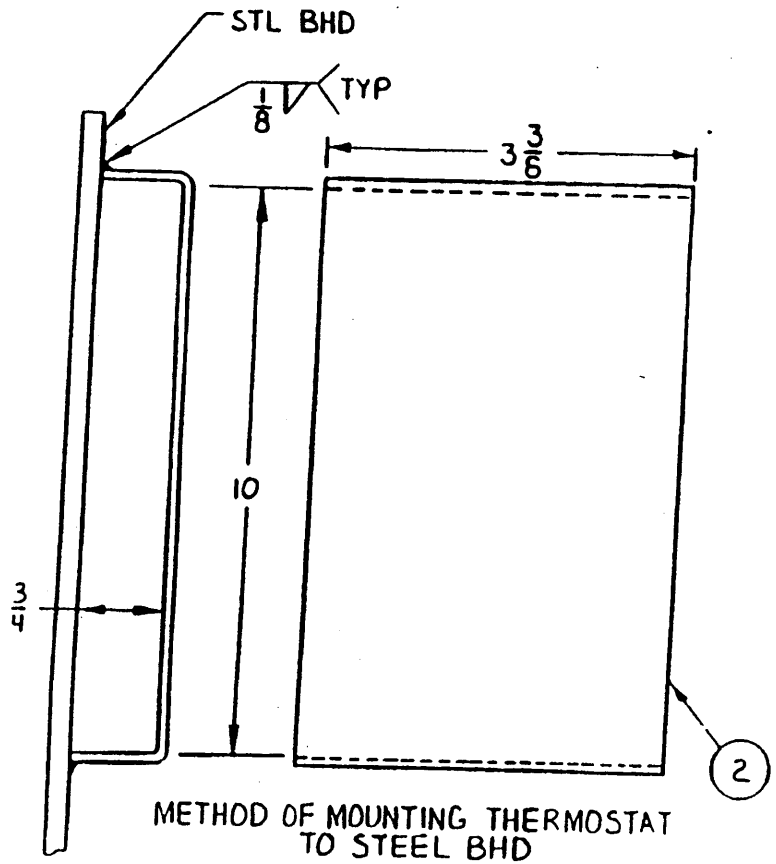

METHOD OF MOUNTING THERMOSTAT TO STEEL BHD

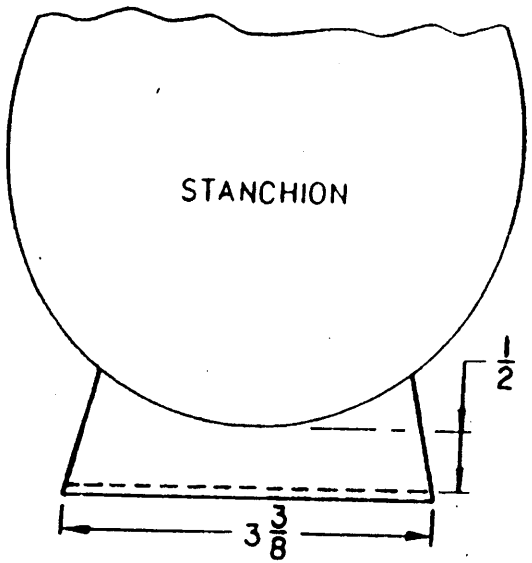

STEEL BHD MOUNT MODIFIED FOR USE ON STANCHION

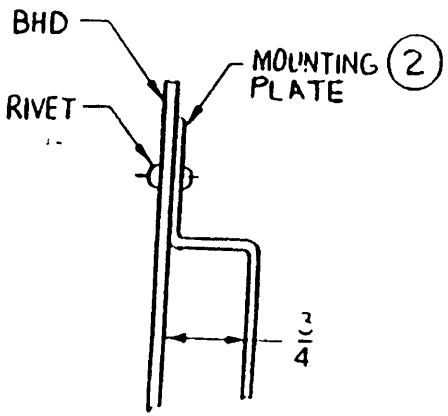

ALT METHOD FOR N.T. BHD

THERMOSTATIC CONTROL DETAILS
MOUNT FOR TYPE "R" THERMOSTAT

DETAIL 79	
DWG NO 501-4870233	REV
STANDARD DETAILS	SHEET 84 OF 140

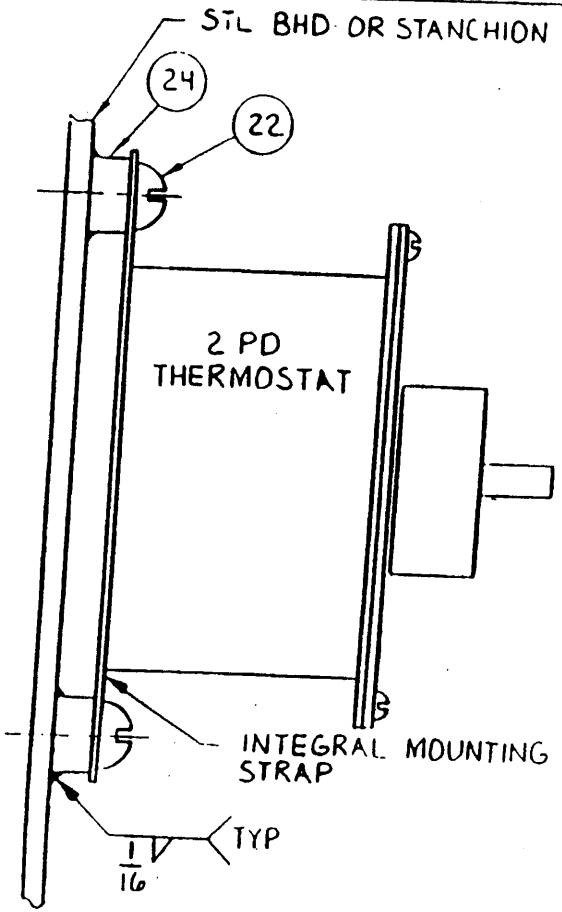

METHOD OF MOUNTING THERMOSTAT
TO STEEL BHD & STANCHION

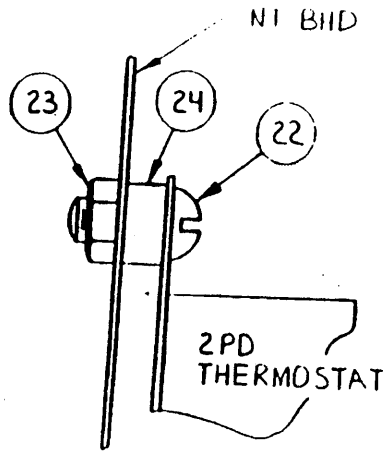

ALT METHOD
FOR N.T. BHD

THERMOSTATIC CONTROL DETAILS

MOUNT FOR 2PD THERMOSTAT

DETAIL 80	
DWG NO 501-4870233	REV
STANDARD DETAILS	SH 85 OF 140

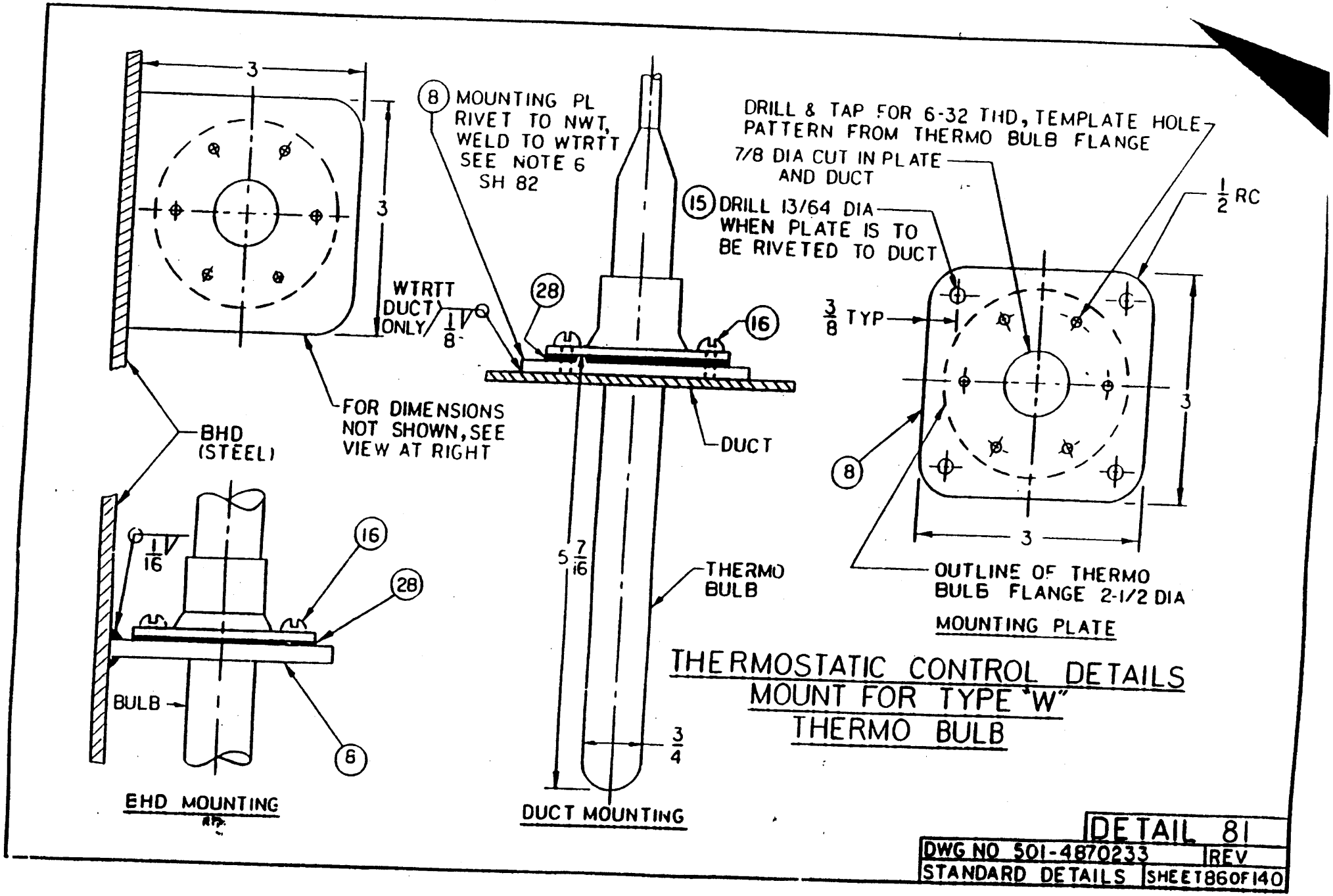
3
3
8 MOUNTING PL RIVET TO NWT, WELD TO WTRTT SEE NOTE 6 SH 82
WTRTT DUCT ONLY
1/8
28
16
FOR DIMENSIONS NOT SHOWN, SEE VIEW AT RIGHT
BHD (STEEL)
1/16
16
28
BULB
6
EHD MOUNTING
5 7/16
THERMO BULB
3/4
DUCT MOUNTING
DUCT
15 DRILL 13/64 DIA WHEN PLATE IS TO BE RIVETED TO DUCT
7/8 DIA CUT IN PLATE AND DUCT
DRILL & TAP FOR 6-32 THD, TEMPLATE HOLE PATTERN FROM THERMO BULB FLANGE
1/2 RC
3/8 TYP
8
3
3
OUTLINE OF THERMO BULB FLANGE 2-1/2 DIA
MOUNTING PLATE
THERMOSTATIC CONTROL DETAILS
MOUNT FOR TYPE "W"
THERMO BULB
DETAIL 81
DWG NO 501-4870233
REV
STANDARD DETAILS
SHEET 86 OF 140

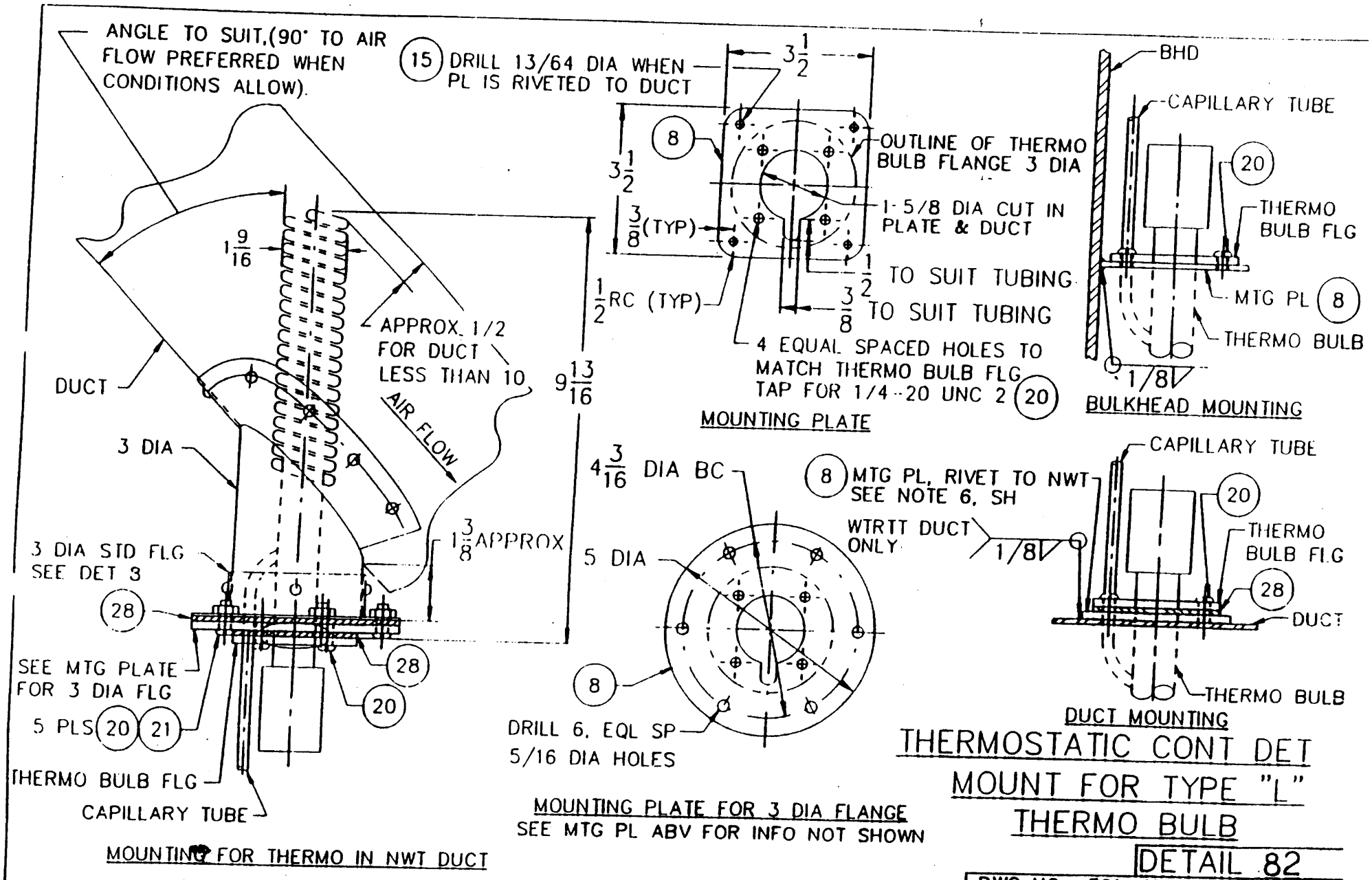

THERMOSTATIC CONT DET MOUNT FOR TYPE "L" THERMO BULB

DETAIL 82

DWG NO. 501-4870233	REV
STANDARD DETAILS	SHEET 87 OF 140

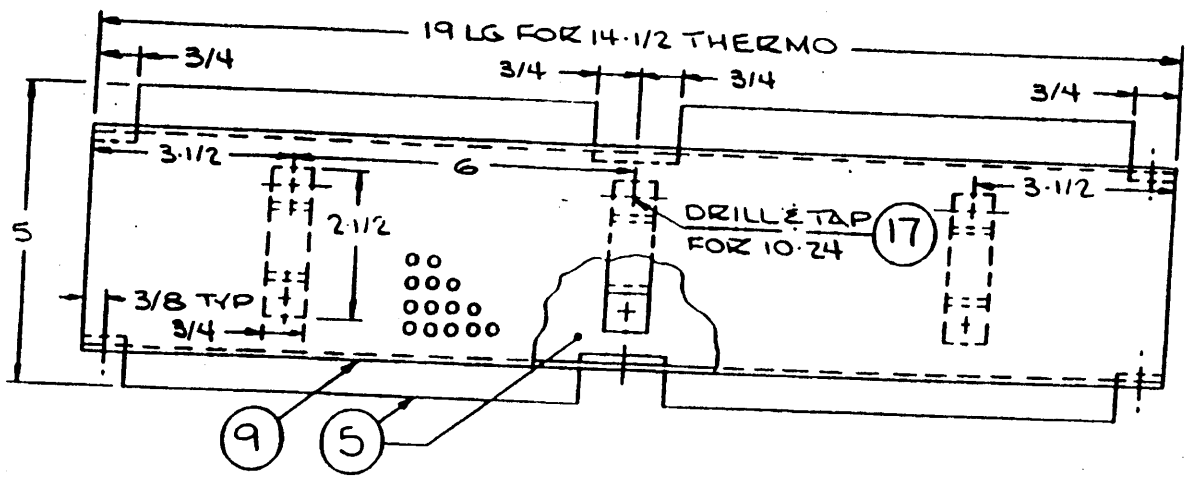

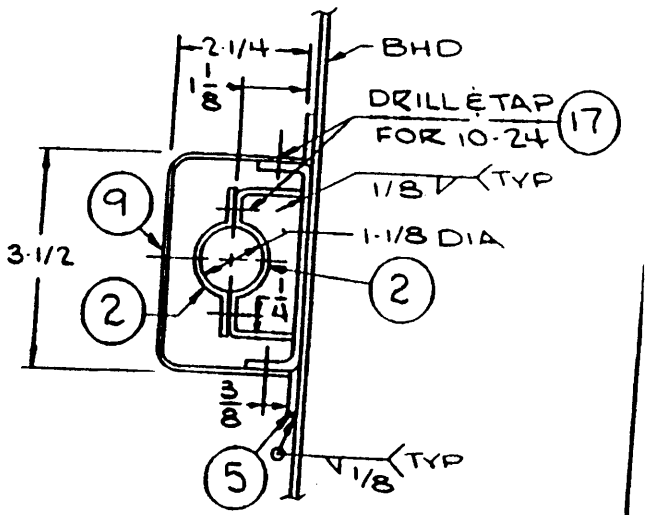

THERMOSTATIC CONTROL DETAILS
MOUNT & GUARD FOR 222-10
THERMOSTAT, MODEL NNM

DETAIL 83	
DWG NO 501-4870233	REV
STANDARD DETAILS	SH 88 OF 140

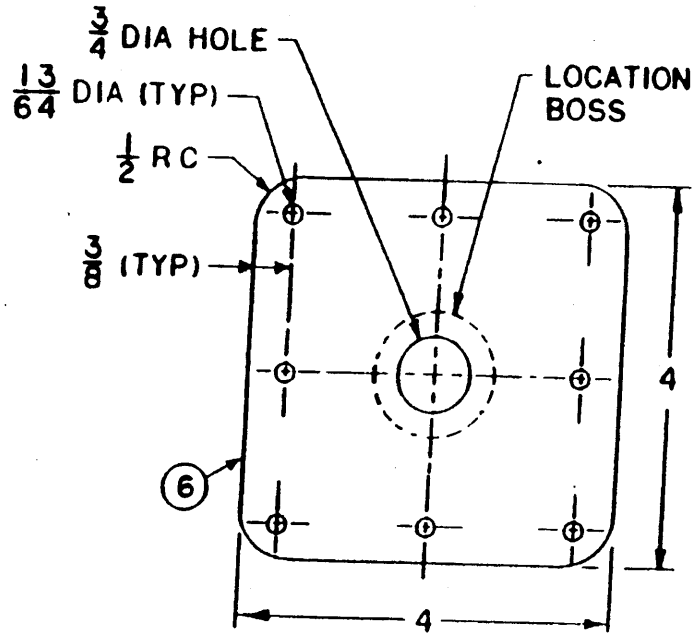

MOUNTING PLATE

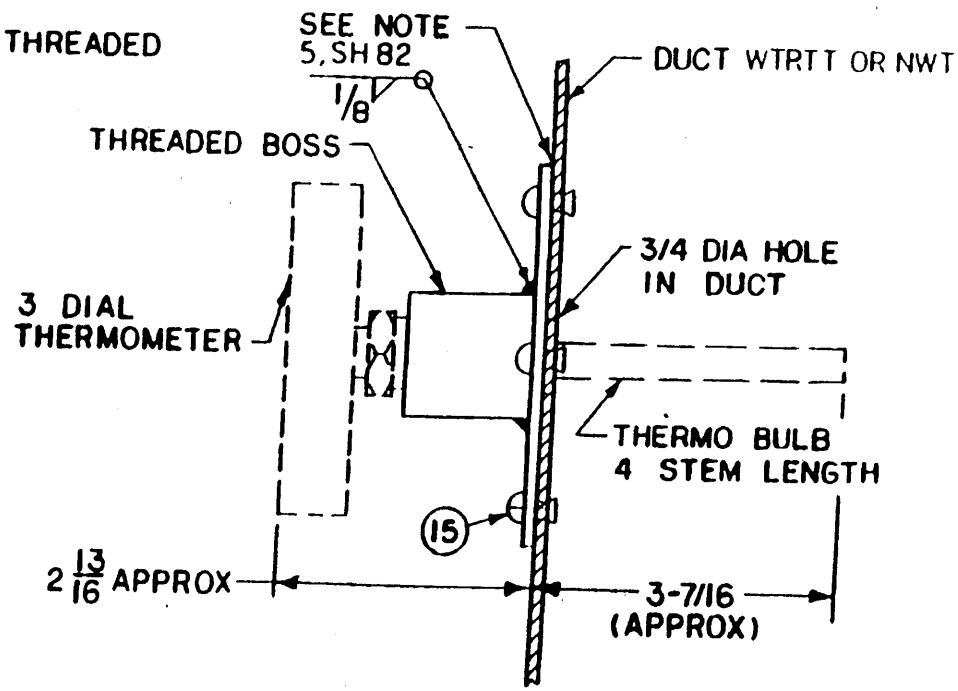

TYPICAL THERMOMETER INSTALLATION

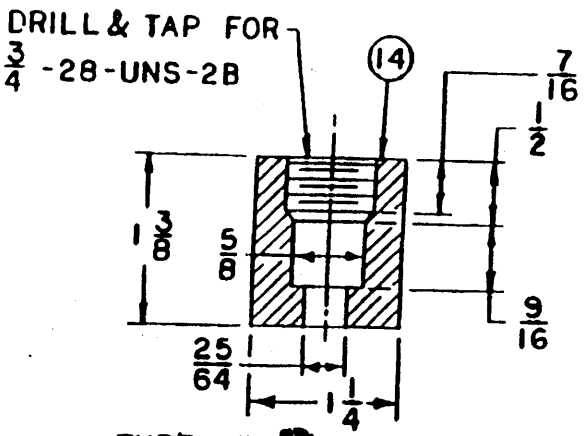

THREADED THERMOMETER BOSS

THERMOSTATIC CONTROL DETAILS
DUCT MOUNTED THERMOMETER

DETAIL 84

DWG NO 501-4870233	REV
STANDARD DETAILS	SHEET 89 OF 140

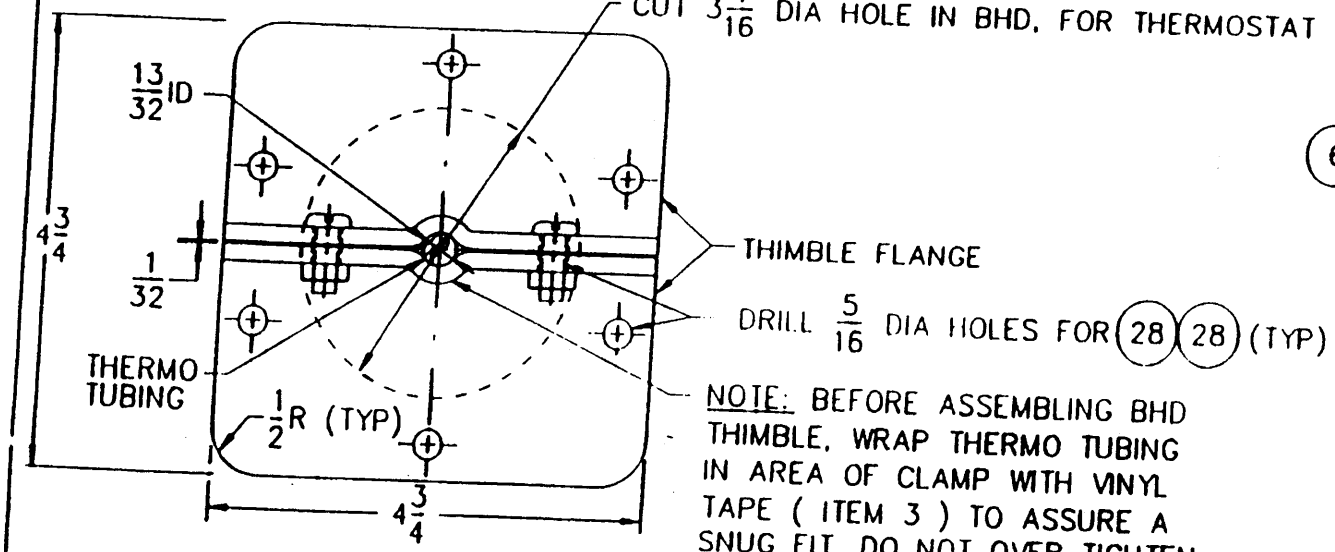

MOUNTING OF THIMBLE FLANGES TO MJ BHD FOR THERMOSTAT TUBING

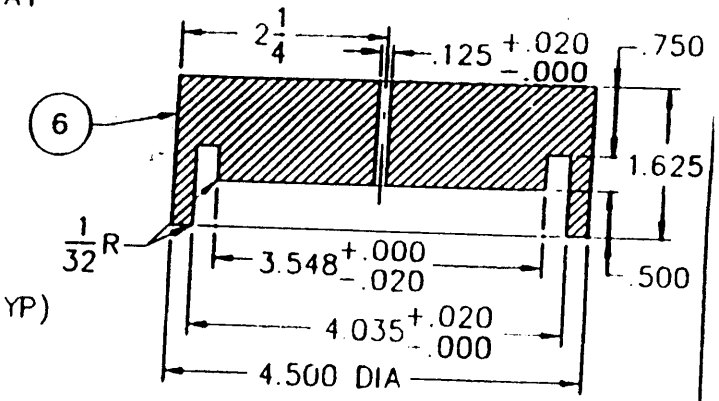

MOLDED RUBBER CAP
SEE NOTE 6, SH 82

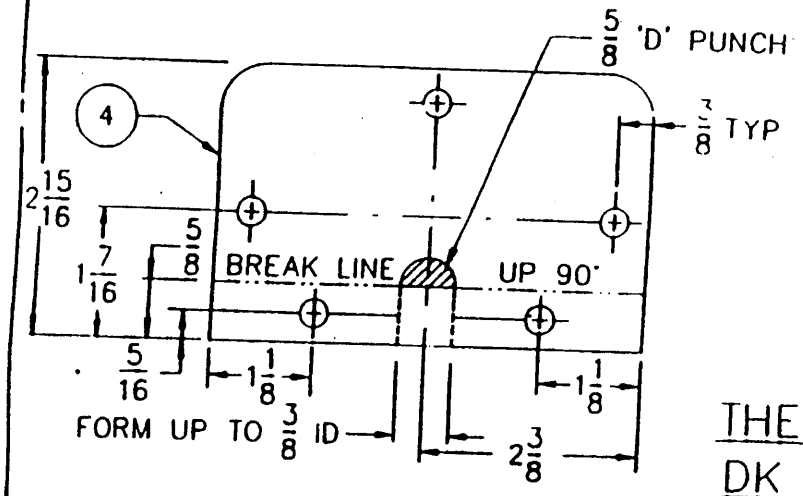

BULKHEAD THIMBLE FLANGE

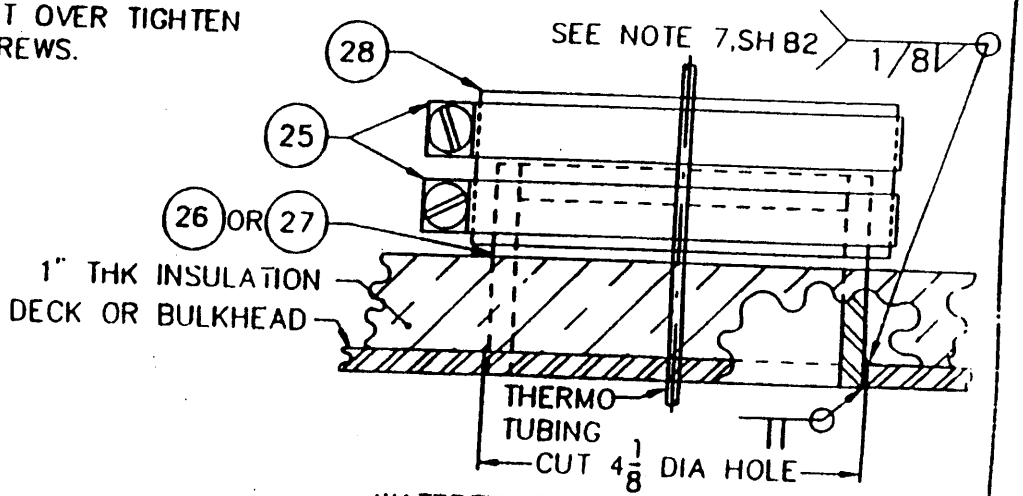

WATERTIGHT DECK & BULKHEAD FITTING

THERMOSTATIC CONT DET DK & BHD PEN FTG FOR THERMO TUBE(STRL & MET J)

DETAIL 85

DWG NO. 501-4870233	REV
STANDARD DETAILS	SHEET 90 OF 140

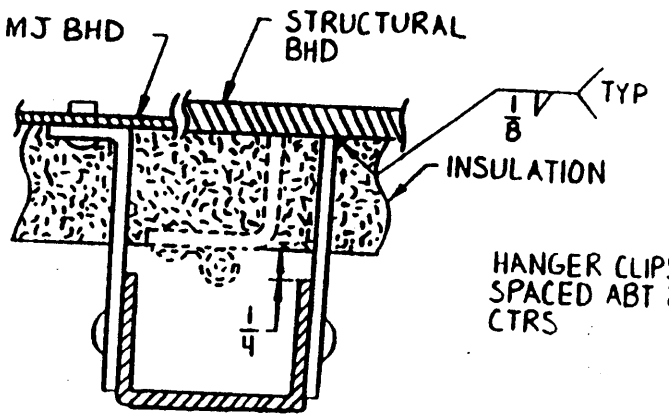

METHOD OF INSTALLING GUARD ON INSULATED BHD

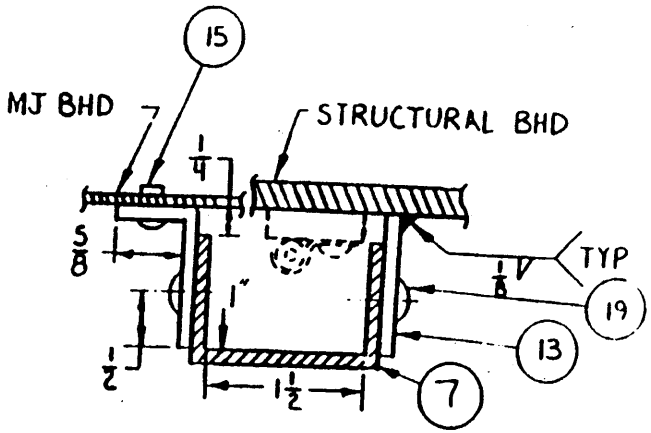

DETAIL - PROTECTIVE GUARD

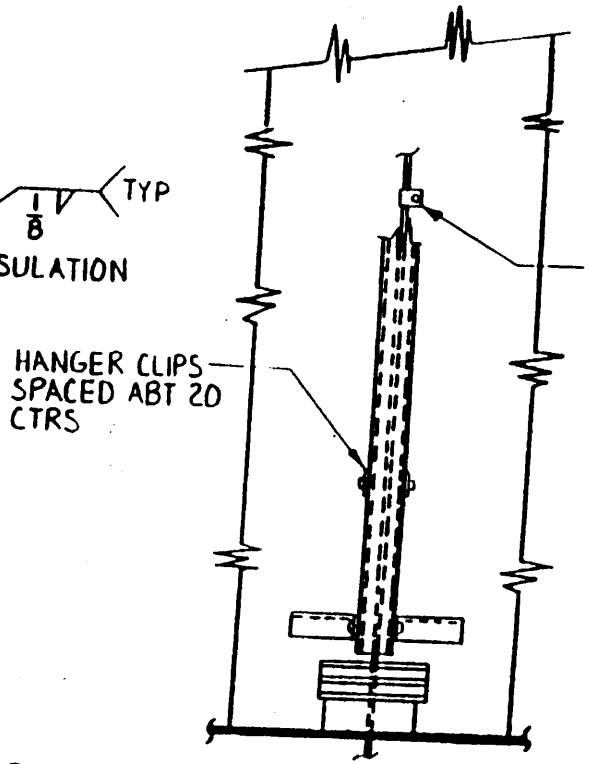

FRONT VIEW

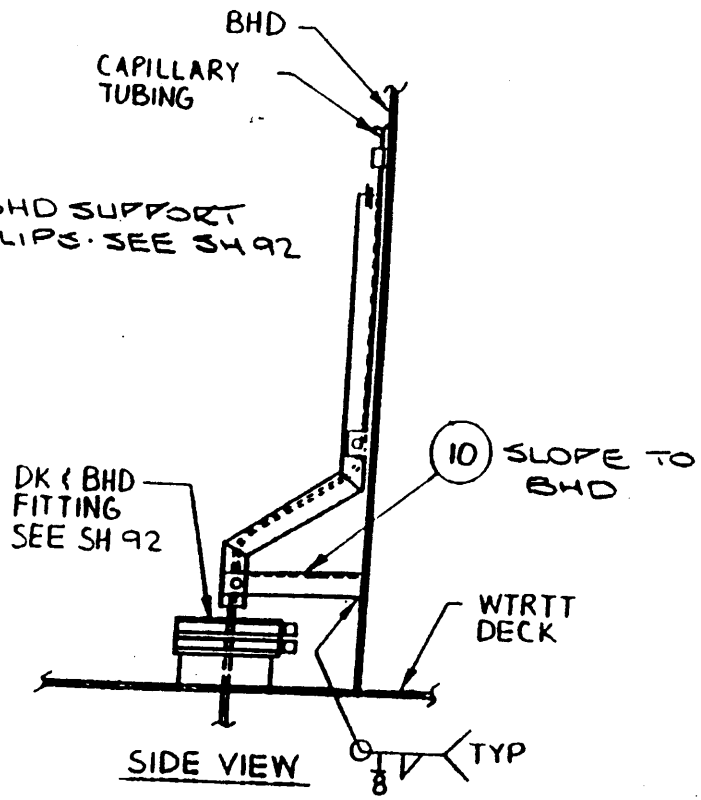

SIDE VIEW

THERMOSTATIC CONTROL DETAILS PROTECTIVE GUARD FOR THERMOSTAT TUBING

DETAIL 86	
DWG NO 501-4870233	REV
STANDARD DETAILS	SH 91 OF 140

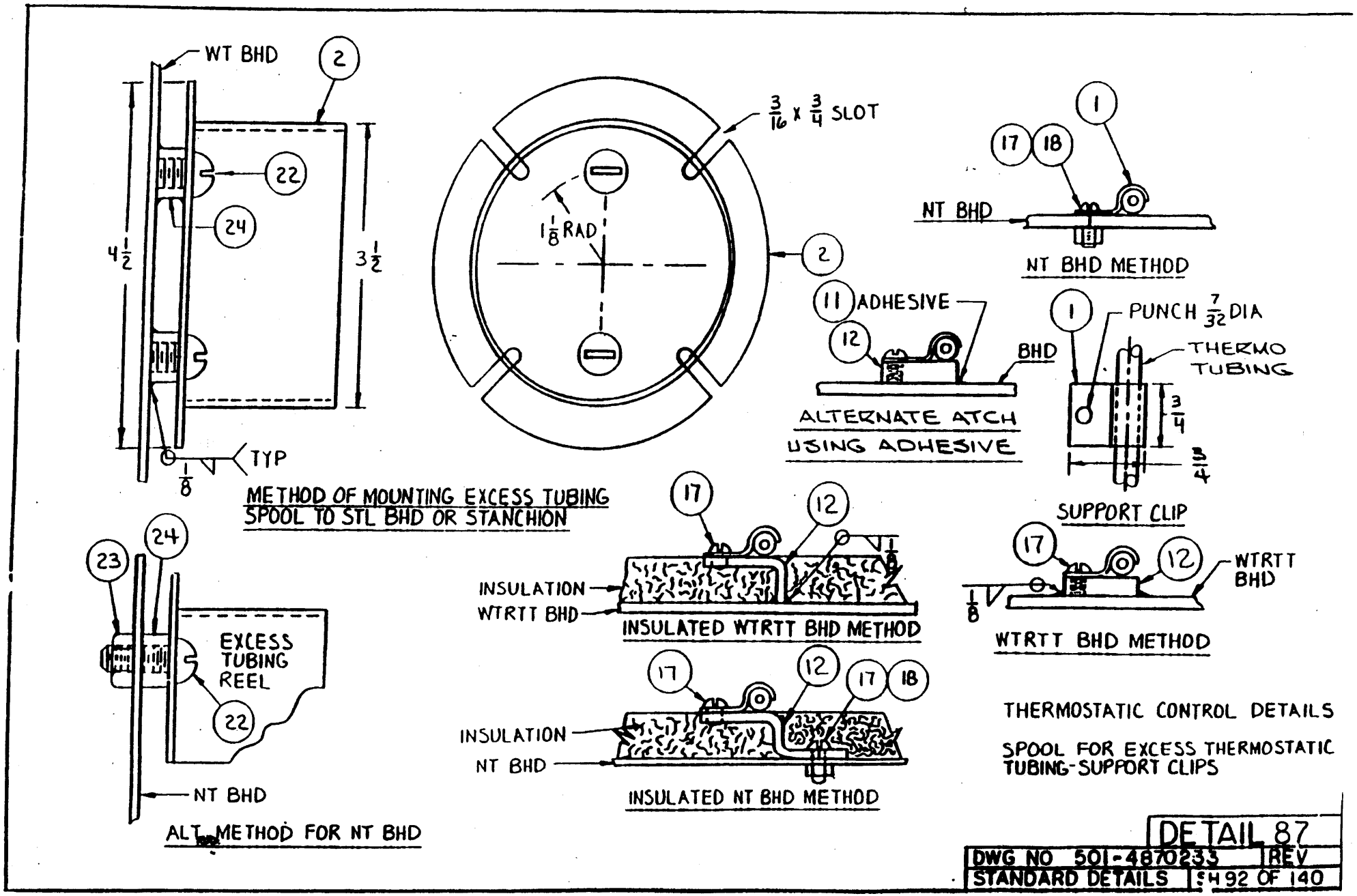
WT BHD
2
22
24
4 1/2
3 1/2
1/8
TYP
METHOD OF MOUNTING EXCESS TUBING SPOOL TO STL BHD OR STANCHION
3/16 X 3/4 SLOT
1 1/8 RAD
2
1
17
18
NT BHD
NT BHD METHOD
11
ADHESIVE
12
BHD
ALTERNATE ATCH USING ADHESIVE
1
PUNCH 7/32 DIA
THERMO TUBING
3/4
1 3/4
SUPPORT CLIP
23
24
EXCESS TUBING REEL
22
NT BHD
ALT METHOD FOR NT BHD
17
12
INSULATION
WTRTT BHD
INSULATED WTRTT BHD METHOD
17
12
WTRTT BHD
1/8
WTRTT BHD METHOD
17
12
17
18
INSULATION
NT BHD
INSULATED NT BHD METHOD
THERMOSTATIC CONTROL DETAILS
SPOOL FOR EXCESS THERMOSTATIC TUBING-SUPPORT CLIPS
DETAIL 87
DWG NO 501-4870233
REV
STANDARD DETAILS
SH 92 OF 140

GAGE FOR AIR FILTERS AND FLAME ARRESTERS - NOTES

1. FILTER GAGES AND STATIC TIPS SHALL BE ORDERED AND LOCATED ON VENT SYSTEM ARRANGEMENT DRAWING. DRAWING WILL SPECIFY THE TYPE OF FILTER GAGE AND THE STATIC TIP ARRANGEMENT NUMBER. (EXCEPTION: FAN COIL ASSY MANUFACTURED BY AMERICAN AIR FILTER CO. ARE PROVIDED WITH INTERNAL STATIC TIPS, FACTORY INSTALLED.)

2. STATIC TIPS SHALL BE INSTALLED PERPENDICULAR TO THE CENTERLINE OF THE AIR STREAM. TUBES WITH STATIC HOLES SHALL FACE INTO THE AIR STREAM. THE TIP SHALL PRETRUDE INTO THE DUCT FAR ENOUGH TO AVOID EDDY CURRENTS AND THE END SHALL BE FREE OF BURRS. ALUMINUM SHALL NOT BE JOINED DIRECTLY TO COPPER OR BRASS.

3. FILTER GAGE SHALL BE TESTED, ADJUSTED AND MARKED AFTER INSTALLATION ABOARD SHIP WITH VENT SYSTEM OPERATING AT HIGH SPEED, ALL ACCESS COVERS IN PLACE, SYSTEM CLEAN AND AIR FILTER AND FLAME ARRESTERS IN PLACE.

4. TYPE I FILTER GAGE: THIS GAGE GIVES A VISUAL SIGNAL WHEN THE PRESS. DIFF. REACHES THE VALUE AT WHICH THE GAGE IS SET. A SIGNAL VANE FLIPS TO AN UPRIGHT POSITION INDICATING A DIRTY FILTER. TYPE I FILTER GAGE ARE NOT TO BE USED ACROSS FLAME ARRESTERS. TO ADJUST GAGE, MOVE THE HOLDING VANE TO THE VERTICAL POSITION BY ROTATING THE HOLDING VANE RESETTING KNOB. THE INDICATING VANE REMAINS HORIZONTAL. TURN THE CALIBRATION SCREW UNTIL THE INDICATING VANE BARELY LEAVES THE HORIZONTAL AND FLIPS TO THE VERTICAL. MOVE THE HOLDING VANE TO THE HORIZONAL POSITION BY ROTATING THE HOLDING VANE RESETTING KNOB. DETERMINE IF THE GAGE WILL OPERATE PROPERLY BY GRADULLY COVERING THE UPSTREAM SIDE OF THE FILTER ASSY. UNTIL THE GAGE INDICATING VANE FLIPS UP. AT THIS POINT THE FILTER ASSY. SHOULD BE 1/2 TO 3/4 COVERED.

5. TYPE II & III GAGES ARE DIRECT READING DIAL TYPE. TO ADJUST, ZERO THE FILTER GAGE BY DISCONNECTING THE PRESSUE TUBING ENTERING THE GAGE AND TURNING THE ZERO ADJUSTING SCREW UNTIL THE POINTER REGISTER ZERO. RECONNECT THE PRESSURE TUBING TO THE GAGE. OPERATE THE VENT SYSTEM AT HIGH SPEED. MARK THE GAGE DIAL WITH A GREEN DOT AT THE POSITION INDICATED BY THE GAGE POINTER. THE VALUE INDICATES THE CLEAN CONDITION OF THE FILTER OR FLAME ARRESTERS. CALCULATE THE DIRTY CONDITION VALUE BY MULTIPLYING THE CLEAN CONDITION VALUE BY 3 FOR AIR FILTER ASSEMBLIES AND BY 2.5 FOR FLAME ARRESTERS. MARK THE GAGE DIAL BEYOND THIS VALUE WITH A RED STRIPE TO INDICATE THE DIRTY ZONE. DETERMINE IF THE GAGE WILL OPERATE PROPERLY BY GRADUALLY COVERING THE UPSTREAM SIDE OF THE FILTER ASSEMBLY OR FLAME ARRESTER UNTIL THE GAGE POINTER REACHES THE DIRTY CONDITION VALUE. THE FILTER ASSEMBLY OR FLAME ARRESTER AT THIS POINT SHOULD BE ONE-HALF TO THREE-FOURTHS COVERED.

(NOTES CONTD ON SHEET 94)

LIST OF MATERIAL

ITEM	DESCRIPTION	MATERIAL	MATERIAL SPEC	STOCK NUMBER	REMARKS
1	GAGE TYPE I	VARIOUS	COMML		F.W. DWYER MFG CO MODEL OR EQL
2	GAGE TYPE II	VARIOUS	COMML		F.W. DWYER MFG CO MODEL OR EQL
3	GAGE TYPE III	VARIOUS	COMML		F.W. DWYER MFG CO MODEL OR EQL
4	STATIC PRESSURE TIP FOR TY I GAGE	VARIOUS	COMML		F.W. DWYER MFG CO OR EQL
5	STATIC PRESSURE TIP, TYPE II GAGE	VARIOUS	COMML		F.W. DWYER MFG CO OR EQL
6	STATIC PRESSURE TIP, TYPE III GAGE	VARIOUS	COMML		F.W. DWYER MFG CO OR EQL
7	MOUNTING PAD, 7.65 LB PL	STEEL	ASTM A569		CUT TO SUIT
8	PHMS 12 - 24 NC-2, 3/4 LG	STEEL	FF-S-92		
9	GASKET, 1/8 THK	RUBBER	MIL-R-900		CUT TO SUIT
10	TUBING, 5/8 OD X .049 THK	COPPER	ASTM-B-280	4710-00-278-2217	LIN FT REQD
11	FLARED NUT, 5/8 OD TUBE	BRASS	MS 35872		PARKER NO. 41FL-10 OR EQL
12	ADPTR 1/2 MALE IPS THD X 5/8 OD FLARE TUBE	BRASS	MS 35869		PARKER NO. 48F-10-8 OR EQL
13	MOUNTING LUG 1/2 OD ROD X 3/4 LONG	STEEL	MIL-S-22698		DRILL & TAP 12-24 NC-2
14	MOUNTING PLATE, 5.1 LB PL	STEEL	ASTM A569		CUT TO SUIT
15	WASHER	STEEL	FF-W-92		FOR PC NO. 8
16	BUSHING, REDUCING 1/2 IPS THD RO 3/8 IPS THD	BRASS	MS 20822		PARKER NO. 209P-8-6
17	FLARE NUT, 1/4 OD TUBE	BRASS	MS 35872		PARKER NO. 41 FL-4 OR EQL
18	TUBING, 1/4 OD X .032 THK	COPPER	ASTM-B-280	4710-00-278-2214	LIN FT REQD
19	ADPTR 1/8 MALE IPS THD X 1/4 OD FLARE TUBE	BRASS	MS 35869		PARKER NO. 48F-4-2
20	ELBOW, RED 1/2 M IPS THD X 5/8 M FLARE	BRASS	-		PARKER NO. 149F-10-8 OR EQL
21	ELBOW, RED 3/8 M IPS THD X 1/4 M FLARE	BRASS	MS 20822		PARKER NO. 149F-4-6 OR EQL

6. A LABEL PLATE SHALL BE PROVIDED FOR EACH FILTER GAGE. THE PLATE SHALL BE ALUMINUM, INDENTED WITH 3/16 LETTERS AND ATTACHED DIRECTLY TO GAGE OR NEARBY AREA WITH ADHESIVE. THE PLATE INSCRIPTION, AS APPLICABLE, TO BE:

AIR FILTER GAGE	FLAME ARRESTER GAGE
CLEAN SYSTEM AIR FILTER WHEN POINTER IS IN RED AREA	CLEAN SYSTEM FLAME ARRESTER WHEN POINTER IS IN RED AREA

LIST OF MATERIAL AND NOTES FOR GAGES, AIR FILTERS AND FLAME ARRESTERS

DETAIL 89

DWG NO. 501-4870233 REV

STANDARD DETAILS SHEET 94 OF 140

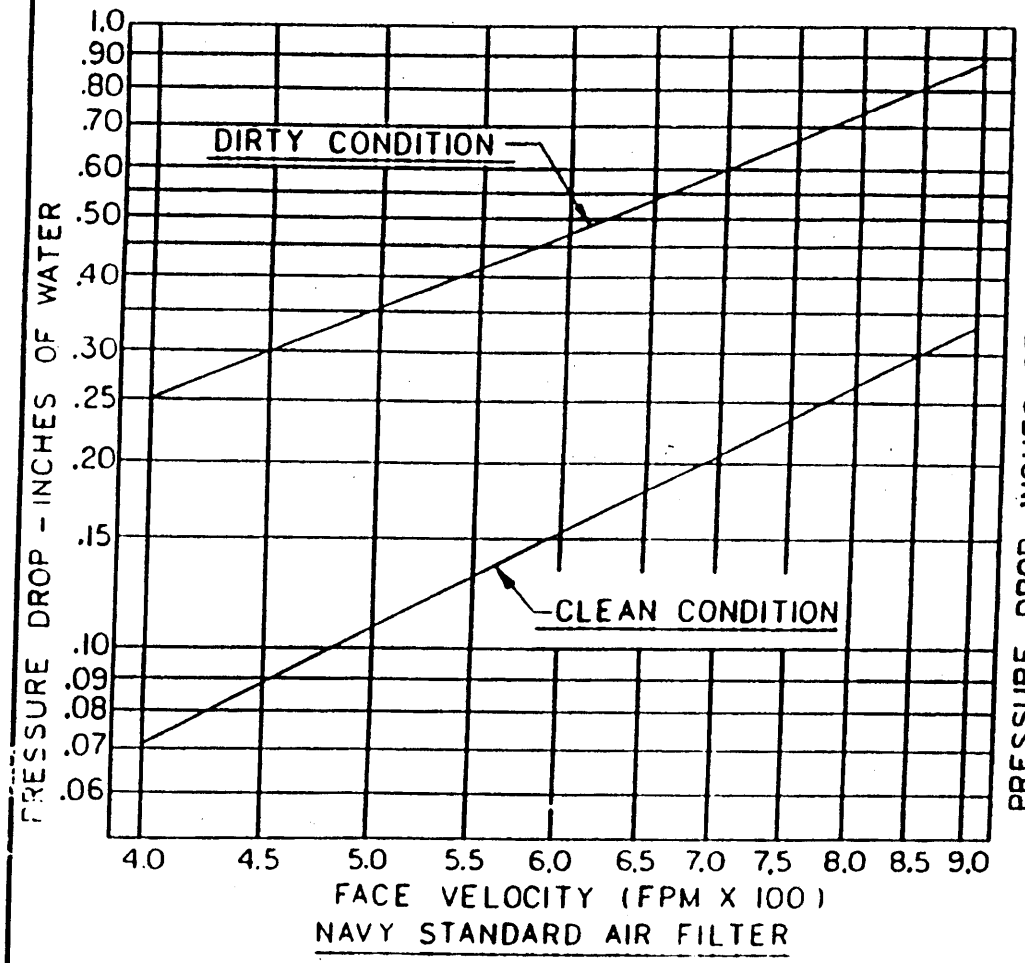

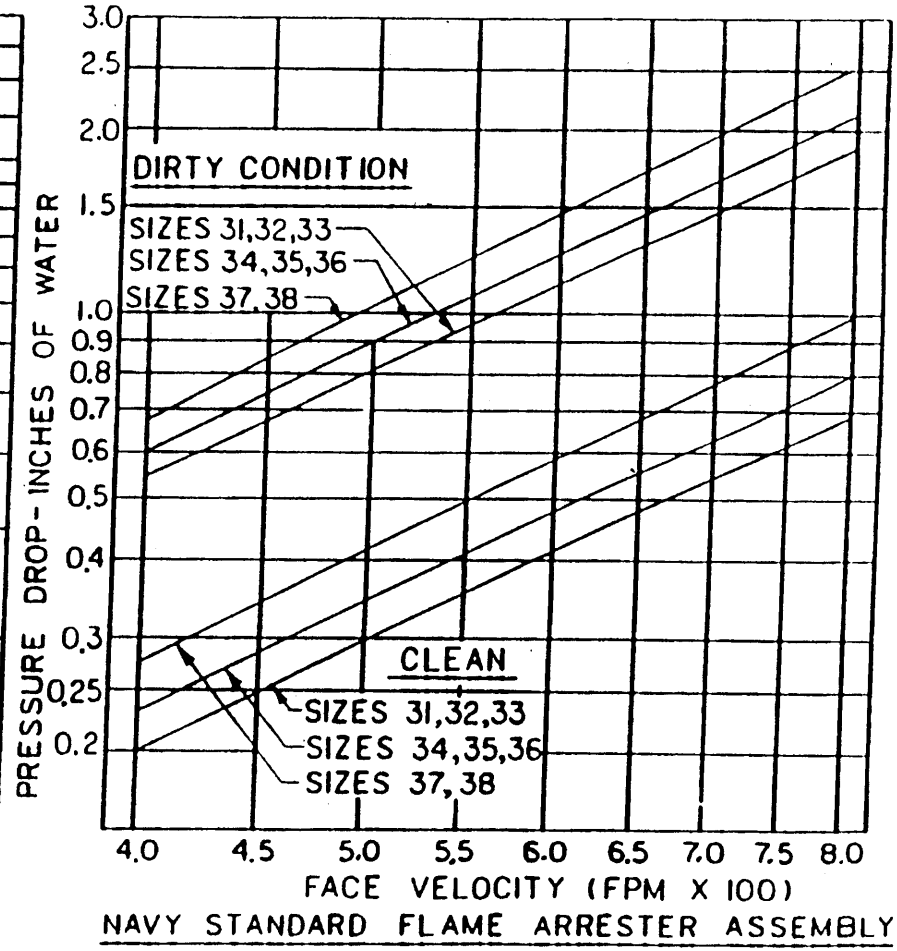

CURVES ARE AVERAGED FROM PERFORMANCE OF AIR FILTER AND FLAME ARRESTORS FROM ALL QUALIFIED SUPPLY SOURCES.

AIR FILTERS AND FLAME ARRESTERS PRESSURE LOSSES

DETAIL 90

DWG NO 501-4870233	REV
STANDARD DETAILS	SHEET 95 OF 140

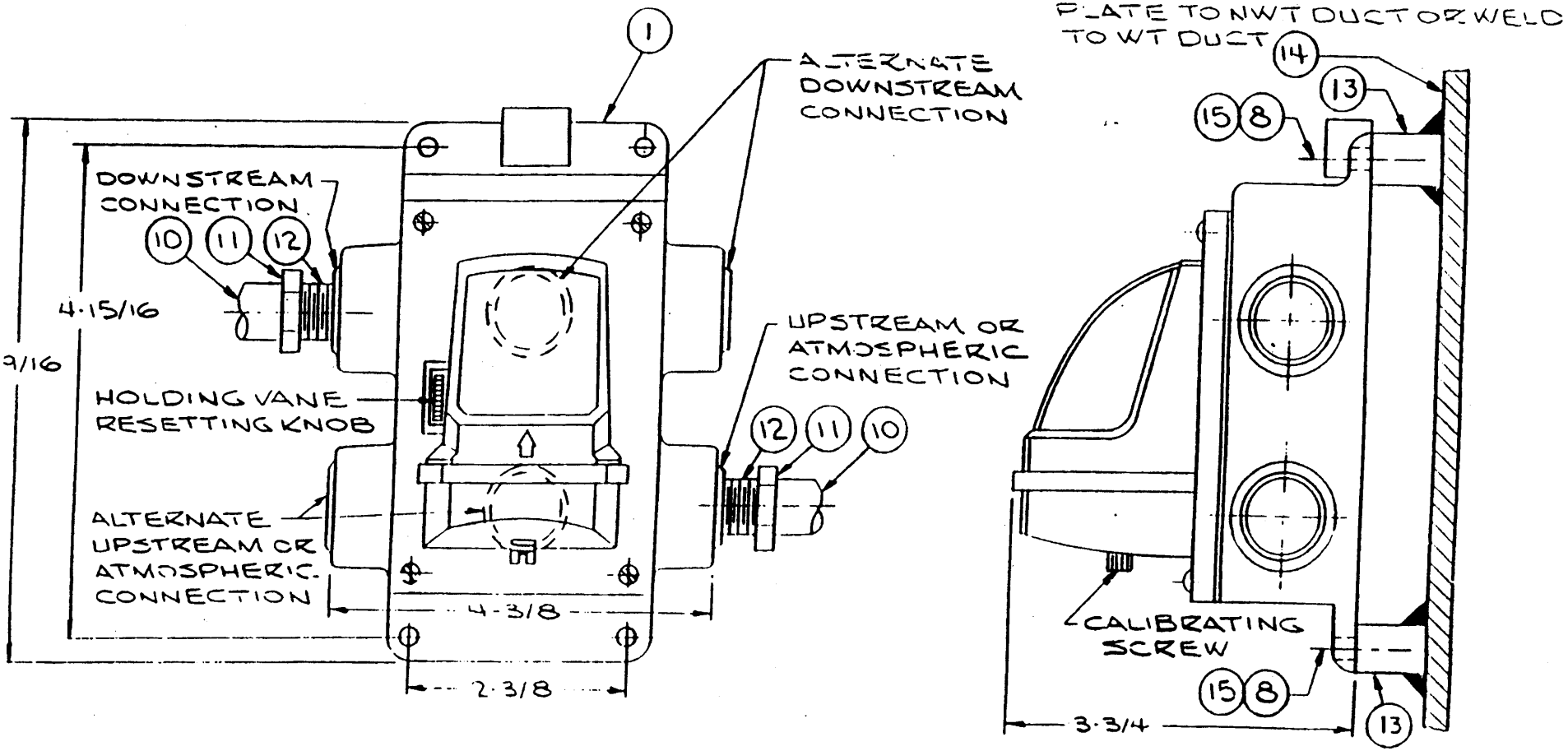

GAGES FOR AIR FILTERS AND FLAME ARSR

TYPE I FILTER GAGE

PREFERRED INSTL

DETAIL 91

DWG NO 501-4870233	REV
STANDARD DETAILS	SHEET 96 OF 140

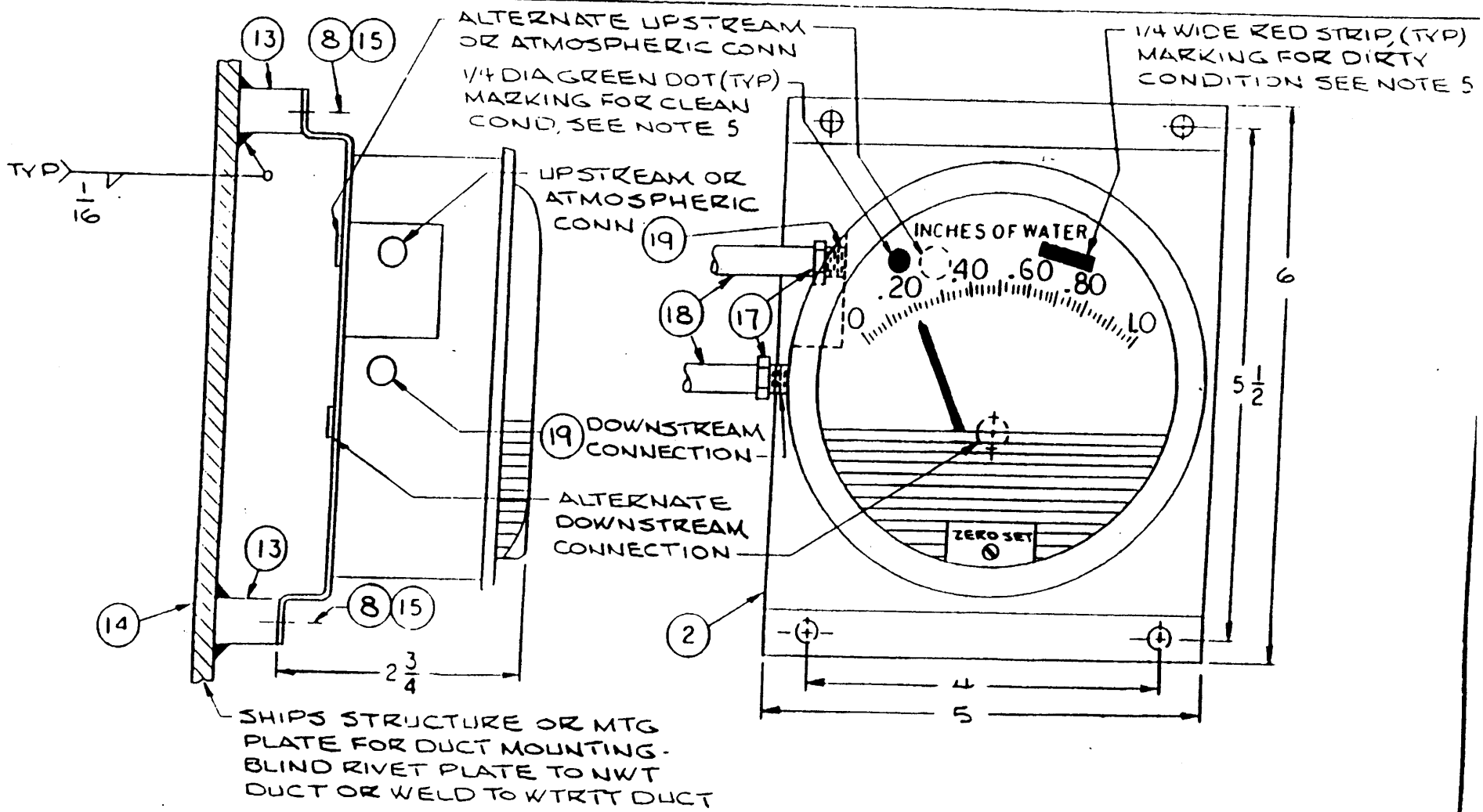

GAGES FOR AIR FILTERS AND FLAME ARSR

TYPE II FILTER GAGE

PREFERRED INSTL

DETAIL 92

DWG NO. 501-4870233	REV
STANDARD DETAILS	SHEET 97 OF 140

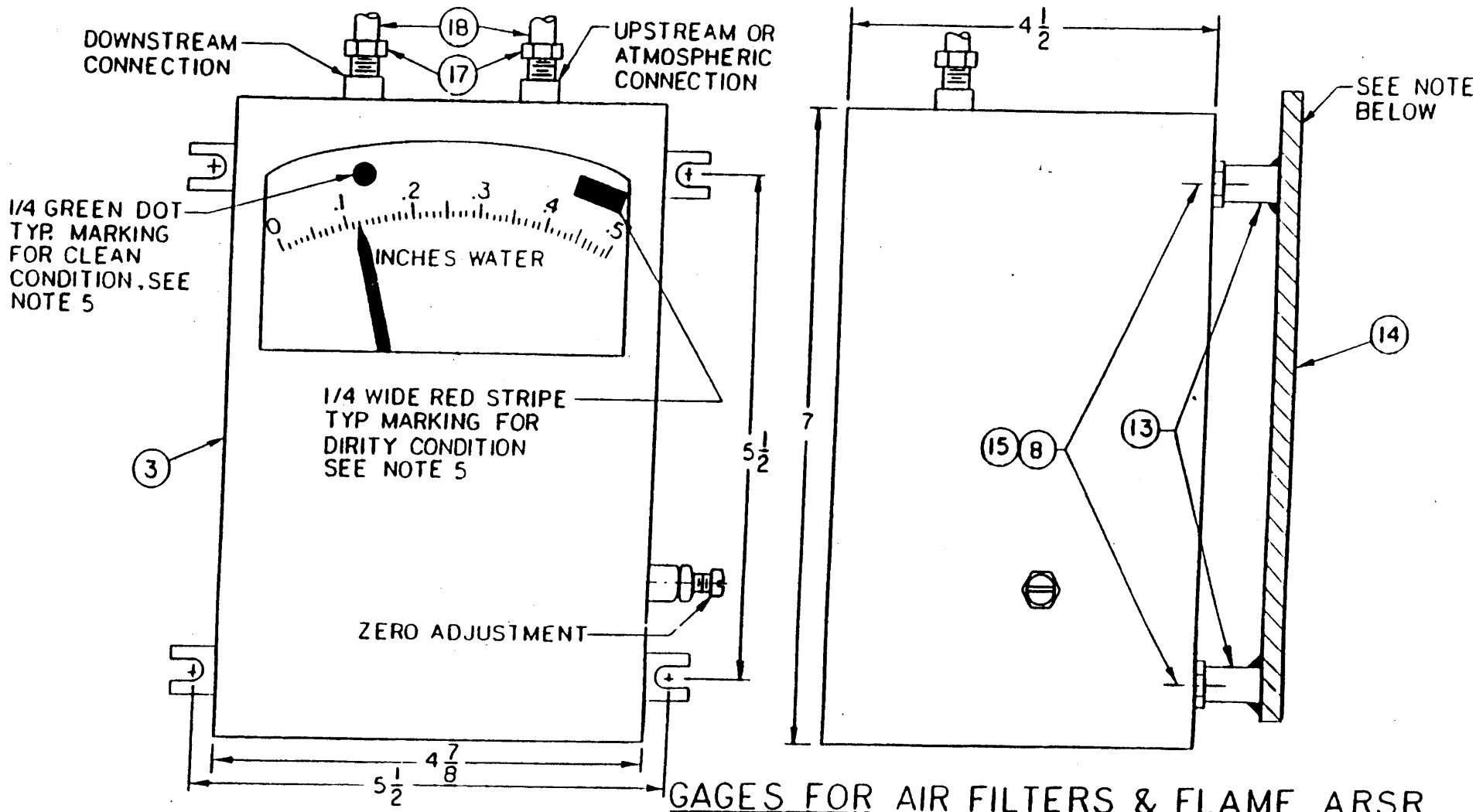

NOTE: MOUNT GAGE TO SHIPS STRUCTURE OR W.T. DUCT AS SHOWN. PROVIDE MOUNTING PLATE FOR NWT DUCT MOUNTING, RIVET PLATE TO DUCT.

GAGES FOR AIR FILTERS & FLAME ARSR
TYPE III FILTER GAGE
PREFERRED INSTL

DETAIL 93

DWG NO 501-4870233	REV
STANDARD DETAILS	SH 98 OF 140

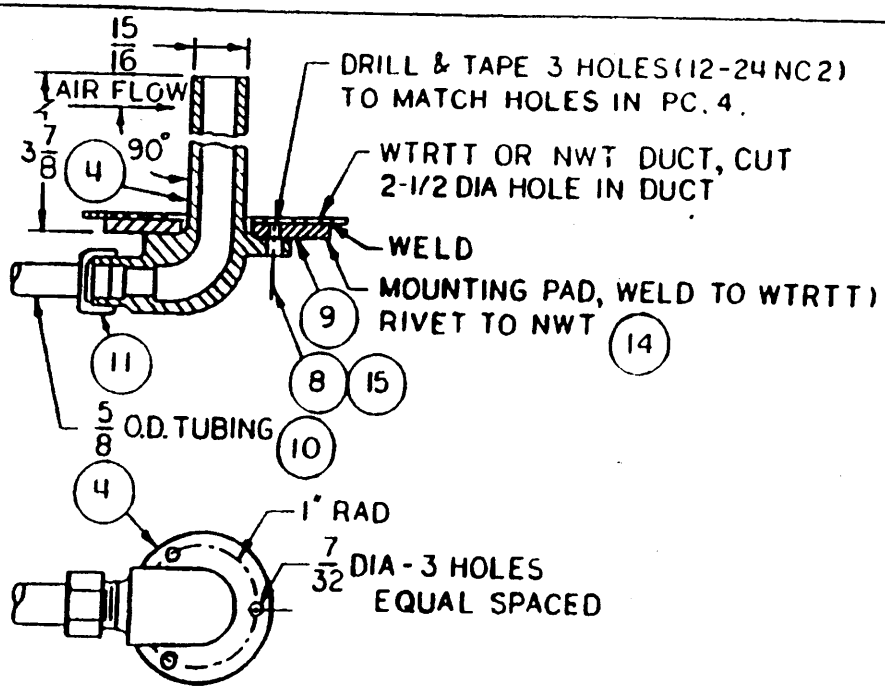

STATIC TIP FOR TYPE I GAGE

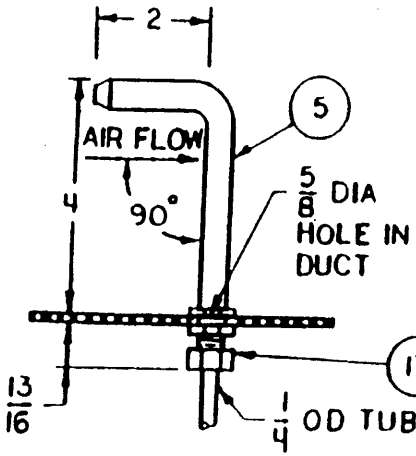

STATIC TIP FOR TYPE II GAGE

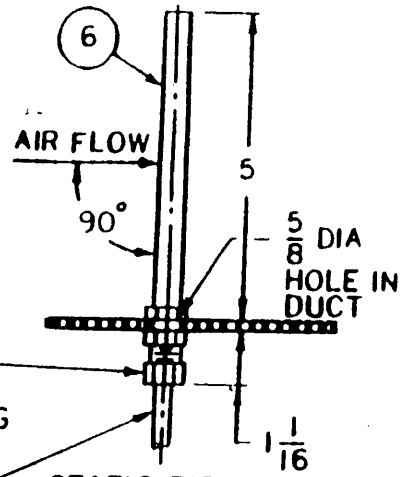

STATIC TIP FOR TYPE III GAGE

NOTE: WHEN ACCESS OR INSPECTION PLATE TO DUCT INTERIOR IS NOT NEARBY, SEE DETAIL "A-A".

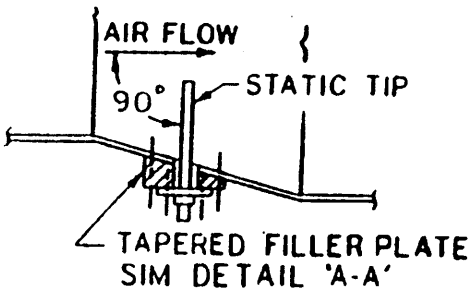

TYP MOUNTING OF STATIC TIP IN DUCT TRANSITION

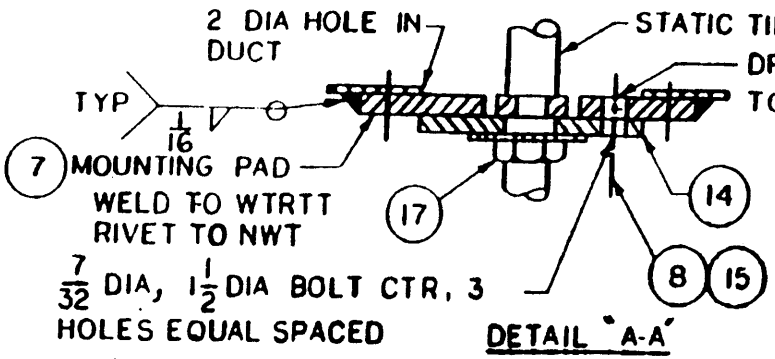

DETAIL "A-A"

GAGES FOR AIR FILTERS AND FLAME ARRESTERS STATIC TIP INSTALLATION PREFERRED INSTL

DETAIL 94

DWG NO 501-4870233	REV-
STANDARD DETAILS	SH 99 OF 140

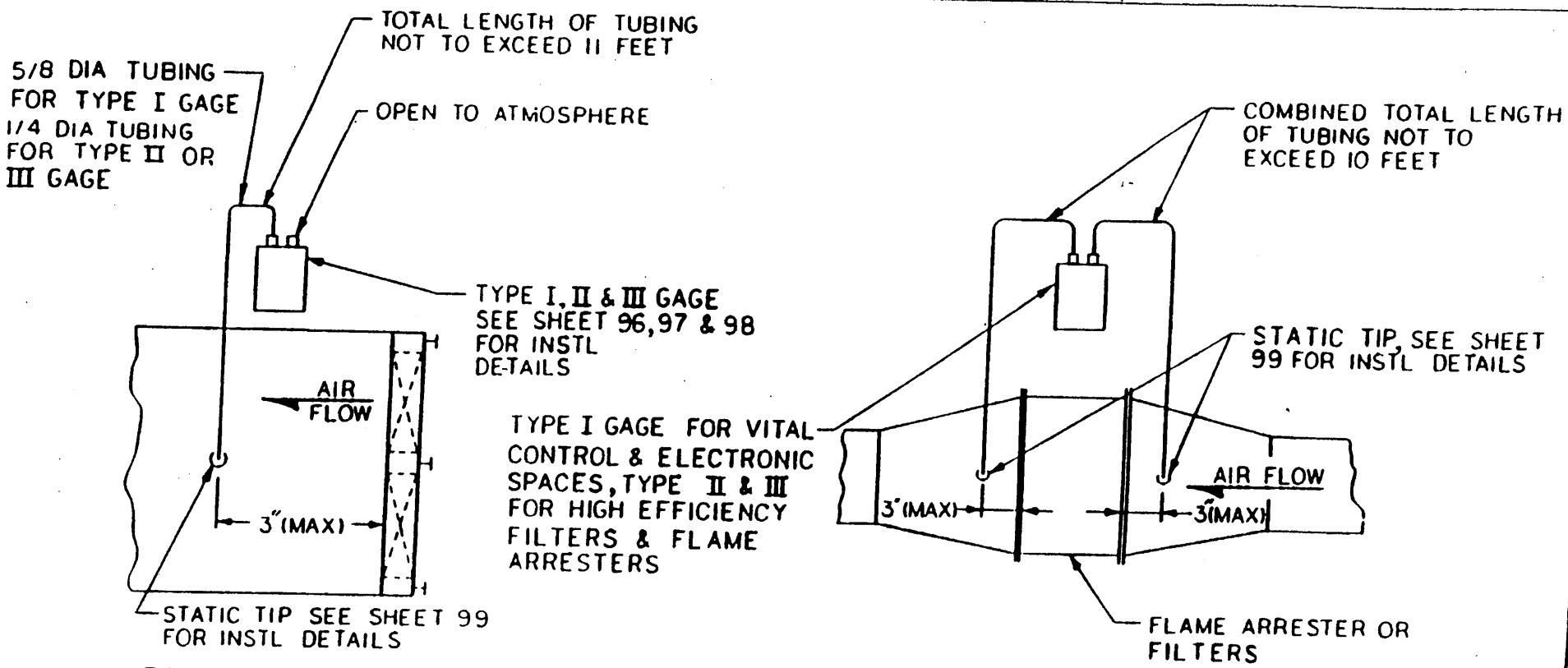

GAGES FOR AIR FILTERS AND FLAME ARRESTERS
GAGE TUBING ARRANGEMENT
PREFERRED INSTL

DETAIL 95	
DWG NO 501-4870233	REV
STANDARD DETAILS	SH 100 OF 140

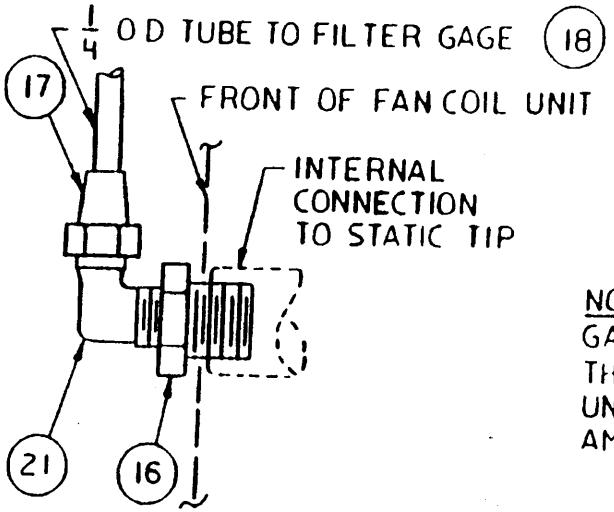

METHOD OF CONNECTION TO FAN COIL FOR TYPE II & III FILTER GAGE

NOTE
GAGE CONNECTIONS SHOWN ON THIS SHEET APPLY TO FAN COIL UNITS MANUFACTURED BY AMERICAN AIR FILTER CO.

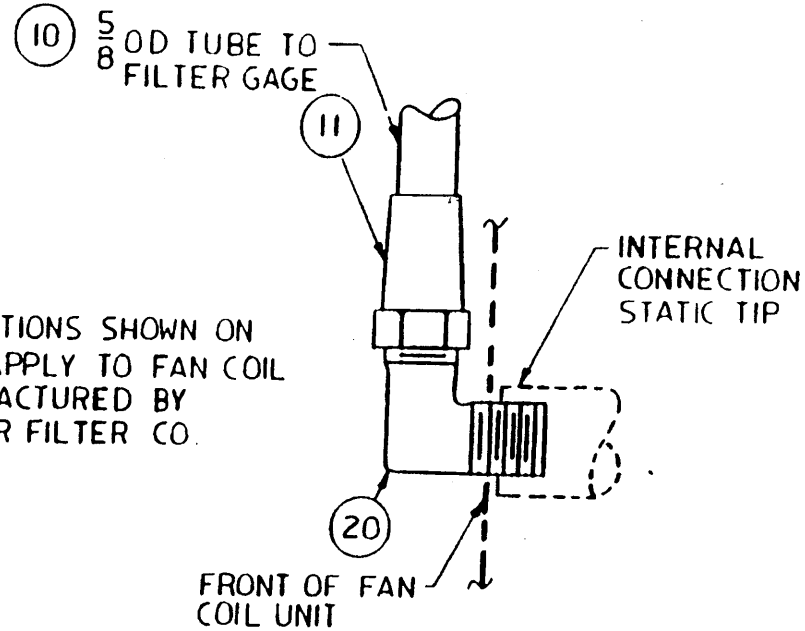

METHOD OF CONNECTION TO FAN COIL FOR TYPE I FILTER GAGE

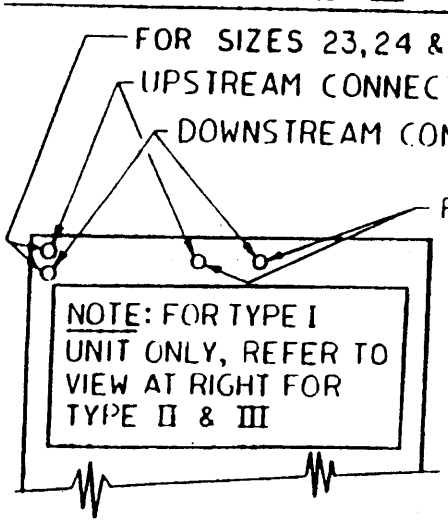

PARTIAL FRONT VIEW - FAN COIL SHOWING GAGE CONNECTION LOCATION

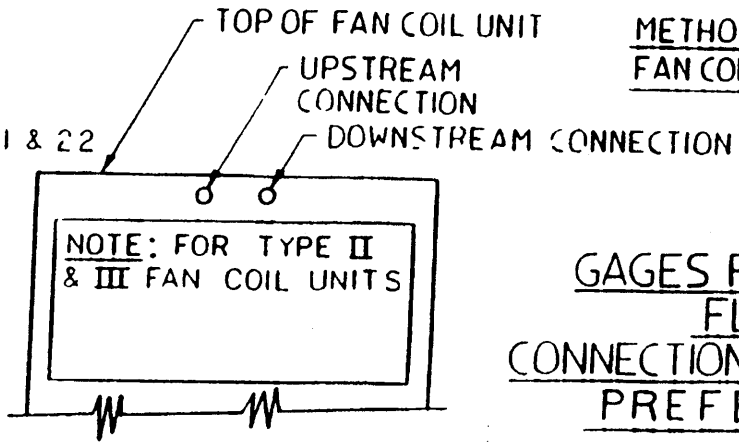

PARTIAL FRONT VIEW - FAN COIL SHOWING GAGE CONNECTION LOCATION FOR SIZES 21, 22, 23, 24 & 25 FAN COILS

GAGES FOR AIR FILTERS AND FLAME ARRESTER CONNECTIONS TO FAN COIL ASSY PREFERRED INSTL

DETAIL 96	
DWG NO 501-4870233	REV
STANDARD DETAILS	SH 101 OF 140

LIST OF MATERIAL

ITEM NO.	DESCRIPTION	MATERIAL	MATERIAL SPEC	STOCK NUMBER	REMARKS
1	TUBING, SEAMLESS, WTRTT	AL	WW-T-700/6		TEMPER "O", .106 WALL THK, SEE NOTE 1.
2	HINGE ARM, .125 THK	AL	QQ-A-250/8		
3	HINGE, PAD, .125 THK	AL	QQ-A-250/8		
4	HINGE, PIN, 1/4 DIA ROD	STEEL	MIL-S-22698		LENGTH TO SUIT
5	WIRE MESH SCREEN, 8 MESH	STEEL	RR-W-360		TY 1, CL 1, .035 DIA WIRE, GALV
6	SCREW FRAME, .104 THK	STEEL	ASTM 569		
7	SCREW, SELF TAPPING, NO. 8	STEEL	FF-S-107		ZINC PLATED, 4 REQD FOR 10 DIA
8	WIRE MESH SCREEN, 1/2	STEEL	RR-W-360		TY 1, CL 1, .062 DIA WIRE, (NO. 2) GALV
9	GASKET MATERIAL, 1/8 THK	RUBBER	MIL-R-900		MEDIUM SOFT
10	COVER PLATE, .125 THK	AL	QQ-A-250/8		
11	WAFER CHECK VALVE	AL	VARIOUS		SEE NOTE 2
12	MATL FOR SPECIAL FLG SECTION	AL	QQ-A-250/8		.125 THK

NOTES - CHECK VALVE, MAGAZINE OVER FLOW

1. ROLLED ALUMINUM SHEET (.100 THK, QQ-A-250/8) MAY BE SUBSTITUED FOR SEAMLESS TUBING, LIST OF MATERIAL PC NO.1.
2. WAFER CHECK VALVE (LIST OF MATERIAL PC NO. 11) SHALL BE EQUAL TO PRINCE CO. OF NORMAN, OKLAHOMA, SERIES 15 G, WITH ALUMINUM BODY, BUNA N SEAT, STAINLESS STEEL DISC AND TRIM. CHECK VALVE RELIEF SHALL BE AT .15 PSI MINIMUM AND .50 PSI MAXIMUM.

LIST OF MATERIAL AND NOTES FOR MAGAZINE OVERFLOW CHECK VALVES

DETAIL .97

DWG NO. 501-4870233 REV

STANDARD DETAILS SHEET 102 OF 140

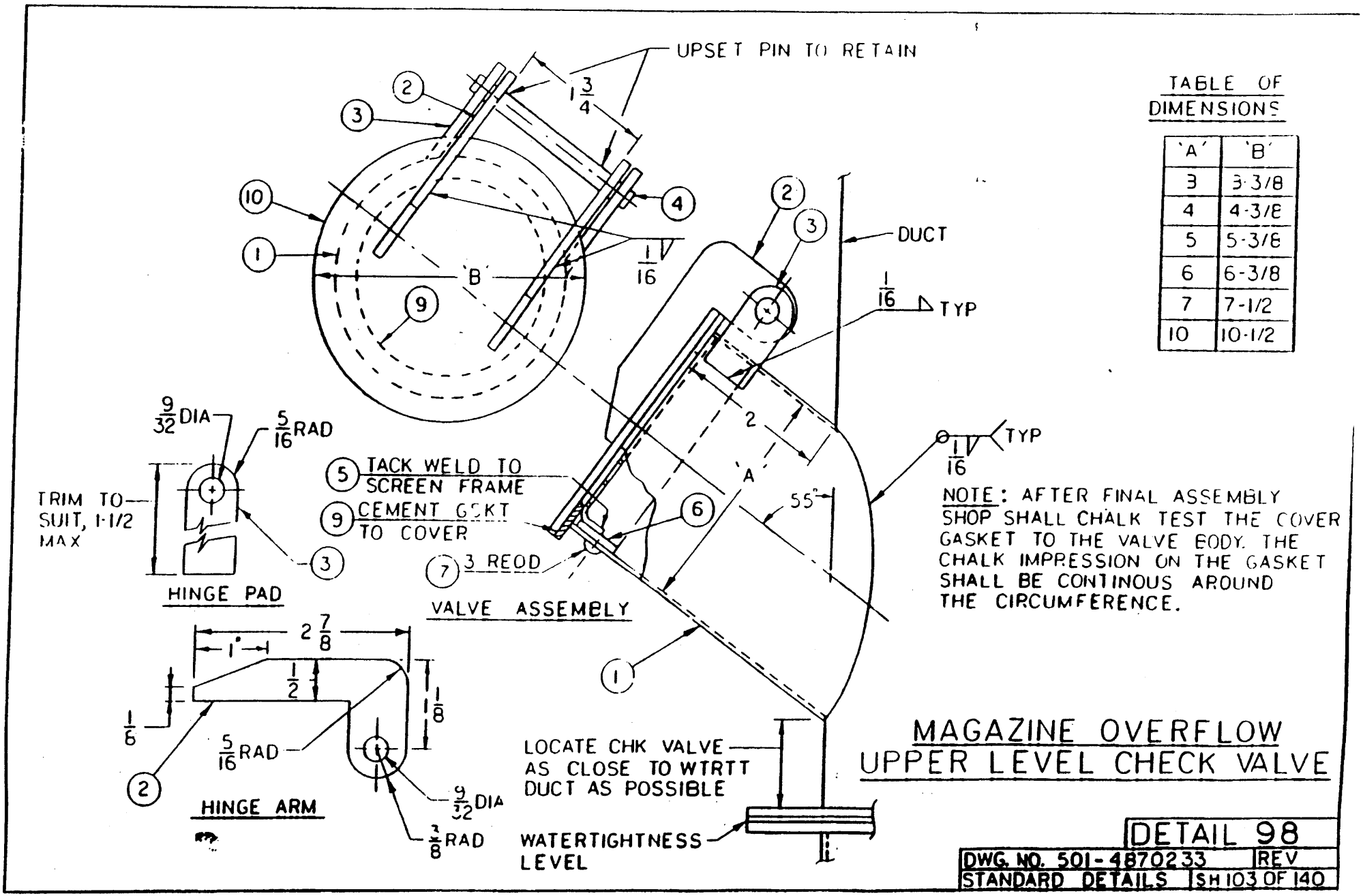

TABLE OF DIMENSIONS

'A'	'B'
3	3-3/8
4	4-3/8
5	5-3/8
6	6-3/8
7	7-1/2
10	10-1/2

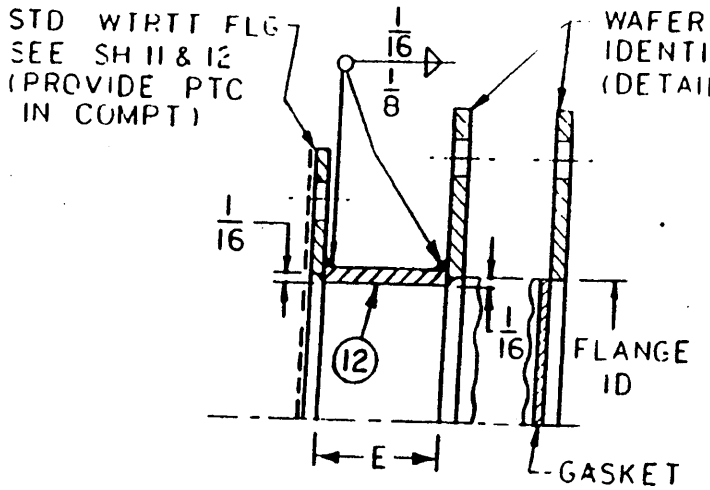

DETAIL A-A
SPECIAL FLANGE ARRANGEMENT

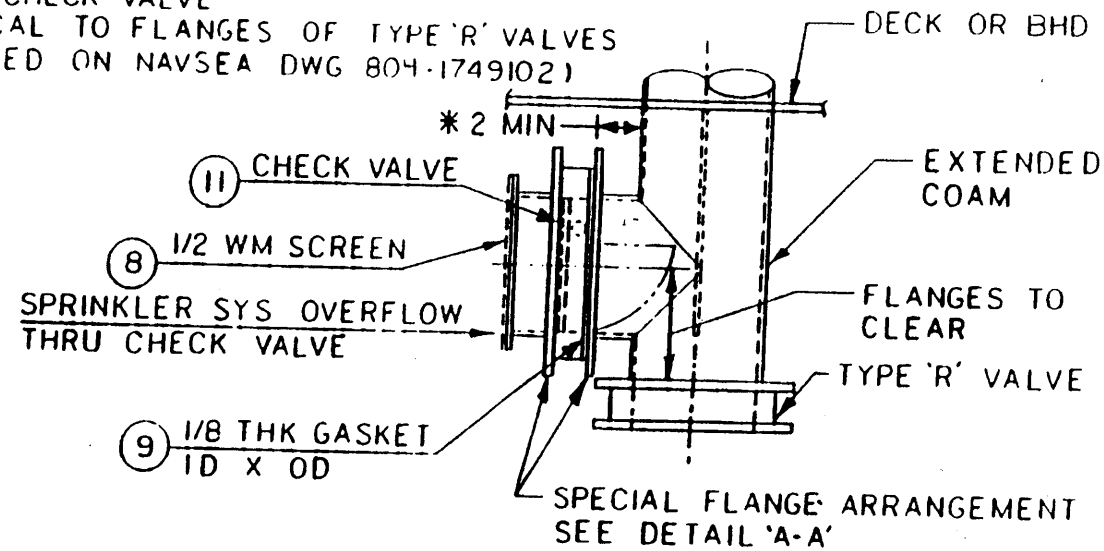

* LENGTH OF BRANCH TO BE DETERMINED FROM COLUMN D.
THE MINIMUM DUCT OR FLG INSIDE DIA IS THE SAME AS DIMESION C (C=ID OF DUCT)

TABLE OF DIMENSIONS
WAFER CHECK VALVE, L/M ITEM 11

VALVE SIZE	A	B	C	D	E
2-1/2	4-7/8	1-7/8	2-1/2	1-1/2	1-1/2
3	5-3/8	2	3-1/16	2	1-1/2
4	6-7/8	2-1/4	4-1/32	2-3/8	1-1/2
5	7-3/4	2-1/2	5-1/32	3-3/8	1-1/2
6	8-3/4	2-3/4	6-1/16	4-1/4	2
8	11	2-7/8	8	6-1/2	2-3/4
10	13-3/8	3-1/8	10	7 1/8	3-3/8
12	16-1/8	3-3/8	12	8-3/4	4-1/2

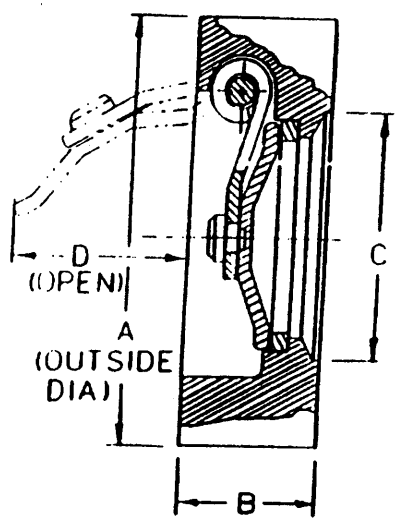

SECTION VIEW
WAFER CHECK VALVE

LOWER LEVEL CHECK VALVE
TYPICAL INSTL
(MAGAZINE SPACES)

DETAIL 99

DWG NO 501-4870233	REV
STANDARD DETAIL	SH 104 OF 140

LIST OF MATERIAL

ITEM NO	DESCRIPTION	MATERIAL	MATERIAL SPEC	STOCK NUMBER	REMARKS
1	BODY, .125 THK	STEEL	ASTM 569		
2	COVER, 1/2 THK	STEEL	MIL-S-22698		
3	SHAFT, 7/8 DIA	CRS	ASTM 108		
4	STRONGBACK	STEEL	MIL-S-22698		
5	3/4-10-NC2 BOLT, 3-1/16 LG	BRASS	MIL-B-994		
6	SPRING PIN, 1/8 DIA 1-1/8 LG	CRES	MS 171572		
7	GASKET, 5/16 THK	RUBBER	MIL-R-880A		
8	CLIP, .125 THK	STEEL	ASTM 569		
9	HEX HEAD BOLT, 1/4-20-NC2	STEEL	MIL-S-1222		ZINC PLATED
10	HEX NUT, 1/4-20-NC2	STEEL	MIL-S-1222		ZINC PLATED
11	GASKET MATERIAL, 1/8 THK	RUBBER	MIL-R-900		
12	STUFFING BOX CAP	BRASS	MIL R-895		
13	HINGE BLADE, 1/2 THK	STEEL	MIL-S-22698		
14	SPIDER, 5/16 THK	STEEL	MIL-S-22698		
15	PACKING, 3/16 X 3/16 SQ	TEFLON	MIL-P-24396		
16	NO.4 TAPER PIN	STEEL	MIL-P-16610		
17	SPACER, 3/4 IPS PIPE, SCHED 80	STEEL	ASTM A106		
18	CLIP, .062 THK	STEEL	ASTM 569		
19	WASHER, 1-1/2 OD,13/16 ID,1/8 THK	BRASS	MIL-W-1165		
20	SPECIAL FLANGE, 1/4 THK	STEEL	MIL-S-22698		
21	PIN, 1/4 DIA 3/4 LG	STEEL	MIL-S-22698		
22	REINFORCING RING, 3/16 THK	STEEL	ASTM 569		
23	FLANGE OF STFG BOX	BRASS	MIL-B-17511A		
24	HEX HEAD BOLT, 5/16-18-NC2	STEEL	MIL-S-1222		ZINC PLATED
25	WASHER FOR 5/16 BOLT	BRASS	MIL-S-1165		
26	GASKET, 3-1/4 OD X 1-1/2 ID	RBR SYNTH	MIL-G-1086		
27	HEX ROD	STEEL	MIL-S-24093		
28	BEARING FLANGE	CAST BRASS	MIL-S-17511A		
29	COVER NUT 11/16 X 1-1/4 OD	MILD STEEL	MIL-S-22698		
30	1/2 WIRE MESH SCREEN	GALVS	RR-W-360		
31	HANDLE STOP	STEEL	MIL-S-20166		DETAILED ON SHEET 114
32	NO.3 TAPER PIN	STEEL	MIL-P-16610		
33	MATL FOR "U" FRAME, .051 THK	GALVS	QQ-S-775		TYPE I, CLASS D

LIST OF MATERIAL FOR TYPE "M" COVER

DETAIL 100

DWG NO. 501-4870233 REV

STANDARD DETAILS SHEET 105 OF 140

LIST OF MATERIAL

ITEM NO	DESCRIPTION	MATERIAL	MATERIAL SPEC	STOCK NUMBER	REMARKS
34	HANDLE, 1 X 1/4 F.B.	STEEL	MIL-S-22698		
35	HANDLE RETAINER SPRING	BRONZE	QQ-B-750		PHOSPHATE BRONZE, .062 THK
36	HEX HEAD BOLT, 3/8-16-NC2	STEEL	MIL-S-1222		ZINC PLATED
37	HEX NUT, 3/8-16NC2	STEEL	MIL-S-1222		ZINC PLATED
38	LEVEL HUB, 1-1/4 DIA BARSTOCK	STEEL	ASTM 108		COLD RLD, 3/4 ID X 7/8 LG
39	COVER STOP, 1/2 DIA BARSTOCK	STEEL	ASTM 108		COLD RLD
40	GROMMET	COTTON	MIL-P-1220		

NOTES - TYPE "M" COVER

1. THE TYPE "M" COVER IS A SPECIAL PURPOSE WATERTIGHT CLOSURE AND IS INSTALLED IN FLOODABLE COMPARTMEMTS (MAGAZINES). A CHECK VALVE IS PROVIDED WITHIN THE COVER TO RELEASE THE DISPLACED AIR WHEN THE COMPARTMENT IS BEING FLOODED.

2. OPERATION OF THE COVER IS AS FOLLOWS

   (a.) HANDLE IN CLOSED POSITION WITH THE STRONGBACK INSTALLED. (USED ONLY WHEN COMPARTMENT IS BEING AIR TESTED.)
   (b.) HANDLE IN CLOSED (NORMAL) POSITION WITH THE STRONGBACK REMOVED. PROVIDES BOUNDARY WATER-TIGHTNESS BUT ALLOWS AIR ESCAPE.
   (c.) HANDLE IN OPEN POSITION. PROVIDES EXHAUST VENTILATION DURING BLOW OUT PERIOD.

3. WHEN ORDERED ON VENT ARRANGEMENT DWG. SHOP IS TO MANUFACTURE THE COVER, SPECIAL FLANGE AND HANDLE AS A COMPLETE ASSEMBLY.

4. RUBBER GASKET ITEM 7, TO BE CEMENTED IN GROOVE OF ITEM 2.

5. COVER MAY BE ASSEMBLED WITH HANDLE ON RIGHT OR LEFT SIDE. UNLESS OTHERWISE INDICATED ON VENTILATION ARRANGEMENT DRAWING. SHOP SHALL ASSEMBLE WITH HANDLE ON LEFT (AS SHOWN SECT 'B-B')

6. ALL COVERS SHALL BE TESTED IN SHOP AT 4 PSI FOR 10 MINUTES ON DUCT SIDE OF COVER.

7. TYPE "M" COVERS REQUIRE A LABEL PLATE WITH A WATERTIGHT CLOSURE (WTC) NUMBER INSCRIBED.

LIST OF MATERIAL AND NOTES FOR TYPE "M" COVER

DETAIL 101

DWG NO. 501-4870233 REV

STANDARD DETAILS SHEET 106 OF 140

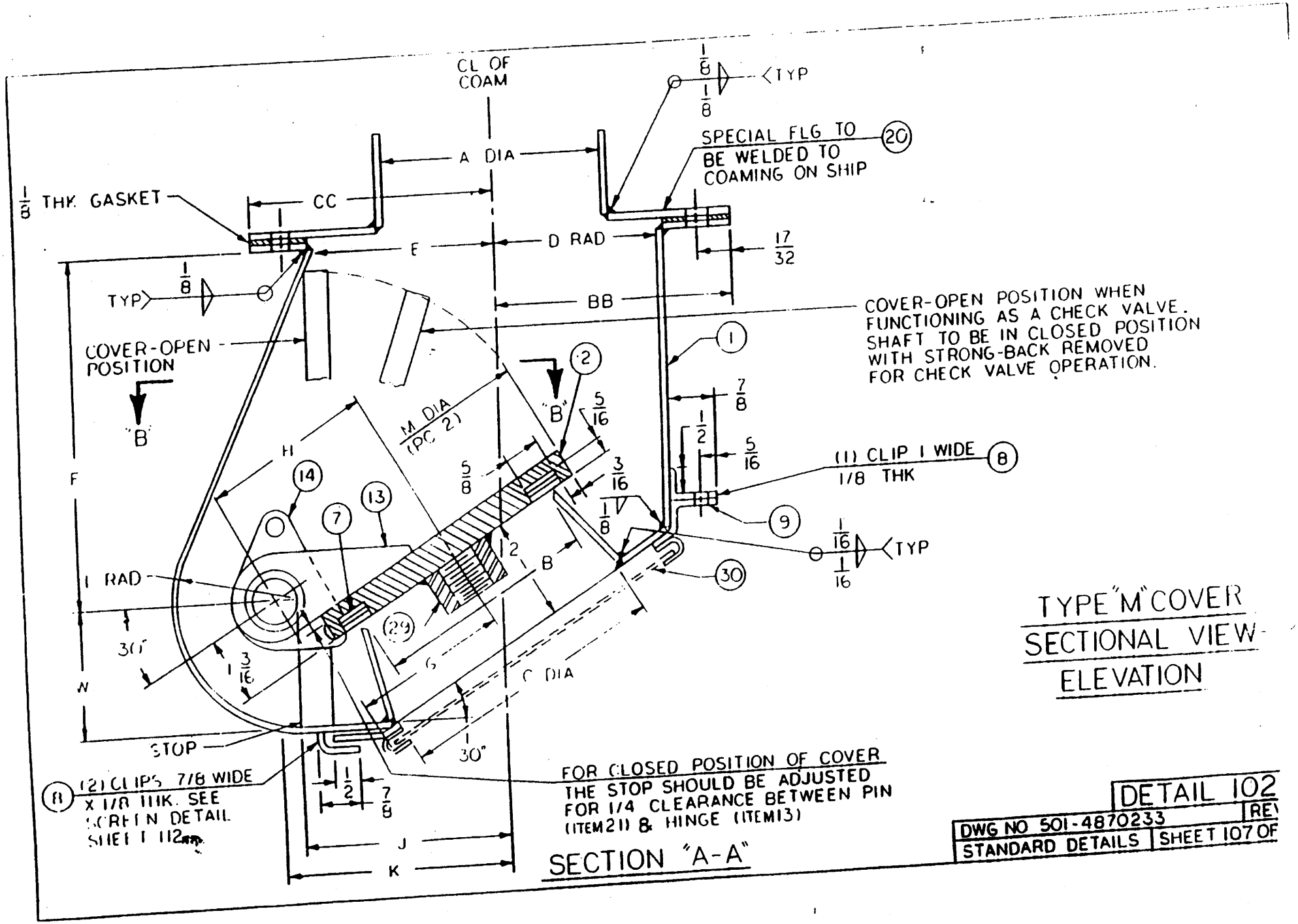
CL OF COAM
1/8 TYP
1/8
SPECIAL FLG TO BE WELDED TO COAMING ON SHIP
20
A DIA
1/8 THK. GASKET
CC
E
D RAD
17/32
TYP
1/8
BB
COVER-OPEN POSITION WHEN FUNCTIONING AS A CHECK VALVE. SHAFT TO BE IN CLOSED POSITION WITH STRONG-BACK REMOVED FOR CHECK VALVE OPERATION.
1
COVER-OPEN POSITION
"B"
2
"B"
7/8
M DIA (PC 2)
5/16
H
1/2
5/16
(1) CLIP 1 WIDE 1/8 THK
8
F
14
13
7
5/8
3/16
1/8
9
1/16
TYP
1/16
2
B
30
1 RAD
29
30°
1 3/16
G
C DIA
N
STOP
30°
(11) (2) CLIPS 7/8 WIDE X 1/8 THK. SEE SCREEN DETAIL SHEET 112
1/2
7/8
J
K
FOR CLOSED POSITION OF COVER THE STOP SHOULD BE ADJUSTED FOR 1/4 CLEARANCE BETWEEN PIN (ITEM 21) & HINGE (ITEM 13)
SECTION "A-A"
TYPE "M" COVER
SECTIONAL VIEW-
ELEVATION
DETAIL 102
DWG NO 501-4870233
REV
STANDARD DETAILS
SHEET 107 OF

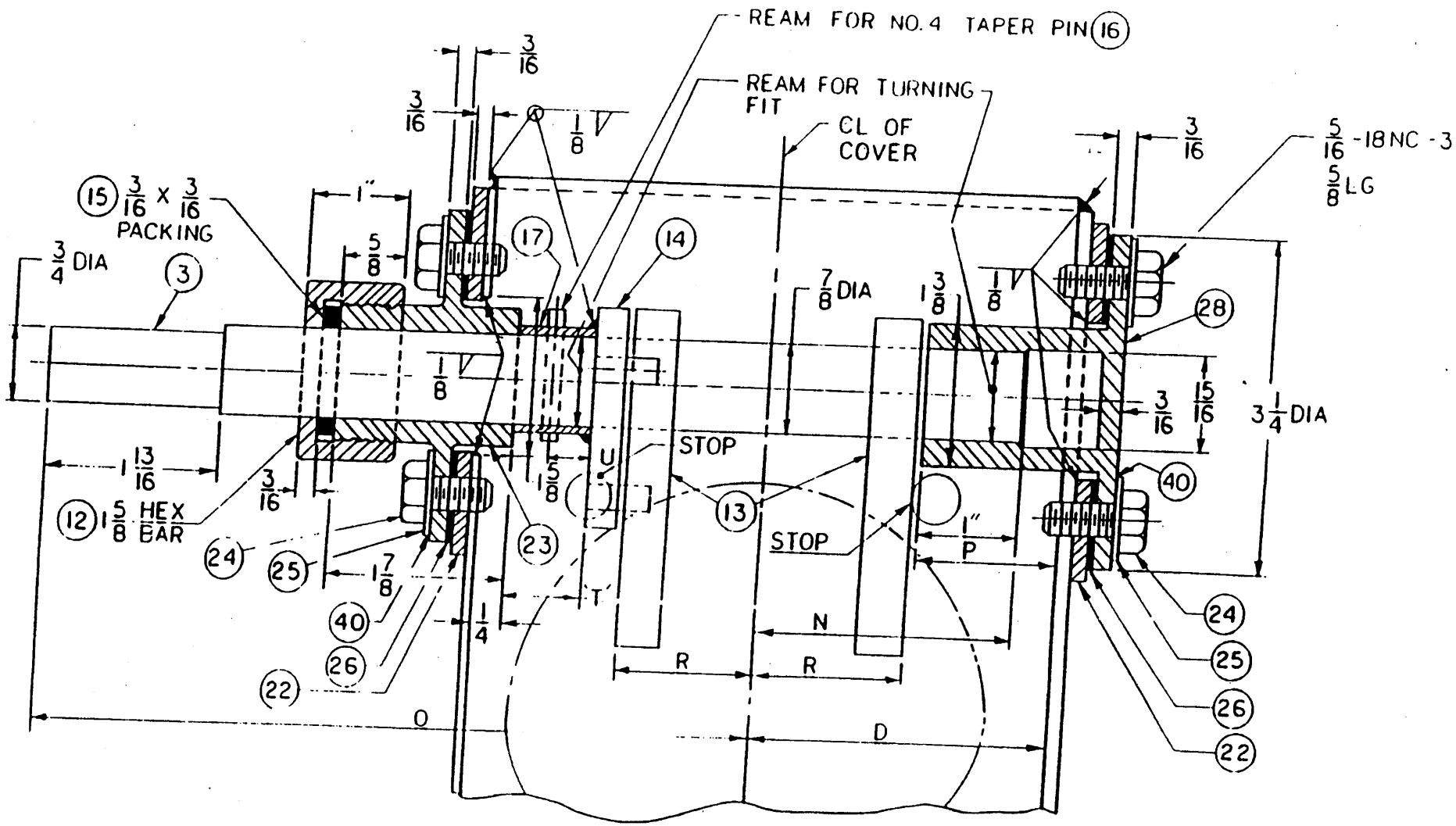

SECTION B-B
TYPE "M" COVER

DETAIL 103	
DWG NO 501-4870233	REV
STANDARD DETAILS	SH 108 OF 140

TABLE OF DIMENSIONS (ALL DIMENSIONS GIVEN IN INCHES)

DIA A	DIA B	DIA C	RAD D	E	F	G	H	J	K	RAD L	DIA M	N	O	P	R	S	T	U	V	W	DIA "DD"	WIRE MESH SCREEN X		RAD Z	
4	4	5	3-1/16	3-7/16	6-3/16	3-1/16	3-3/16	3-3/4	4-5/32	2-1/4	5-1/16	2-5/8	7-9/16	1-7/16	1-9/16	2-3/8	7/8	7/16	2-3/16	2-9/16	3-7/8	2-3/4		3-3/16	
4-1/2	4-1/2	5-1/2	3-5/16	3-5/8	6-11/16	3-5/16	3-7/16	3-23/32	4-1/8	2-1/4	5-9/16	2-5/8	7-13/16	1-11/16	1-9/16	2-3/8	1-1/8	9/16	2-7/16	2-19/32	4-3/8	2-7/8		3-7/16	
5	5	6	3-9/16	3-13/16	7-1/4	3-9/16	3-3/4	3-15/16	4-3/8	2-1/4	6-1/16	2-5/8	8-1/16	1-15/16	1-9/16	2-3/8	1-3/8	3/4	2-11/16	2-17/32	4-7/8	3-1/8		3-11/16	
5-1/2	5-1/2	6-1/2	3-13/16	4	7-13/16	3-13/16	4	4-1/8	4-9/16	2-1/4	6-9/16	2-5/8	8-5/16	2-3/16	1-9/16	2-3/8	1-5/8	7/8	2-15/16	2-17/32	5-3/8	3-3/8		3-15/16	
6	6	7	4-1/16	4-3/16	7-13/16	4-1/16	3-3/4	4-1/32	4-3/8	2-1/4	7-1/16	3-5/8	8-9/16	1-7/16	2-9/16	2-3/8	7/8	7/16	3-3/16	2-13/16	5-7/8	3-1/2		4-3/16	
6-1/2	6-1/2	7-1/2	4-5/16	4-3/8	8-5/16	4-5/16	4	4-1/8	4-1/2	2-1/4	7-9/16	3-5/8	8-13/16	1-11/16	2-9/16	2-3/8	1-1/8	9/16	3-7/16	2-13/16	6-3/8	3-3/4		4-7/16	
7	7	8	4-9/16	4-9/16	9-1/4	4-9/16	4-3/4	4-11/16	5-1/8	2-1/4	8-1/16	3-5/8	9-1/16	1-15/16	2-9/16	2-3/8	1-3/8	11/16	3-11/16	2-9/16	6-7/8	3-7/8		4-11/16	
7-1/2	7-1/2	8-1/2	4-13/16	4-11/16	9-13/16	4-13/16	5	4-27/32	5-1/4	2-1/4	8-9/16	3-5/8	9-5/16	2-3/16	2-9/16	2-3/8	1-5/8	13/16	3-15/16	2-9/16	7-3/8	4		4-15/16	
8	8	9	5-1/16	4-7/8	9-5/8	5-1/16	4-1/2	4-7/16	4-13/16	2-1/4	9-1/16	4-1/8	9-9/16	1-15/16	3-1/16	2-3/8	1-3/8	11/16	4-3/16	2-29/32	7-7/8	4-1/4		5-3/16	
9	9	10	5-9/16	5-3/16	10-3/4	5-9/16	5-3/16	4-3/4	5-13/16	2-1/4	10-1/16	4-1/8	10-1/16	2-7/16	3-1/16	2-3/8	1-7/8	15/16	4-11/16	2-13/16	8-7/8	4-1/2		5-11/16	
10	10	11	6-1/16	5-9/16	12-11/16	6-1/16	6-1/4	6-7/16	6-15/16	2-7/16	11-1/16	5-1/8	10-9/16	1-15/16	4-1/16	4-3/8	1-3/8	11/16	5-3/16	2-7/16	9-7/8	5-1/4		6-3/16	
12	12	13	7-1/16	6-5/16	15-3/16	7-3/8	8-1/16	8-1/4	8-5/8	2-1/4	13-1/16	6-1/8	11-9/16	1-15/16	5-1/16	6-1/8	1-3/8	11/16	6-3/16	2-3/8	11-7/8	6-7/8		7-3/16	

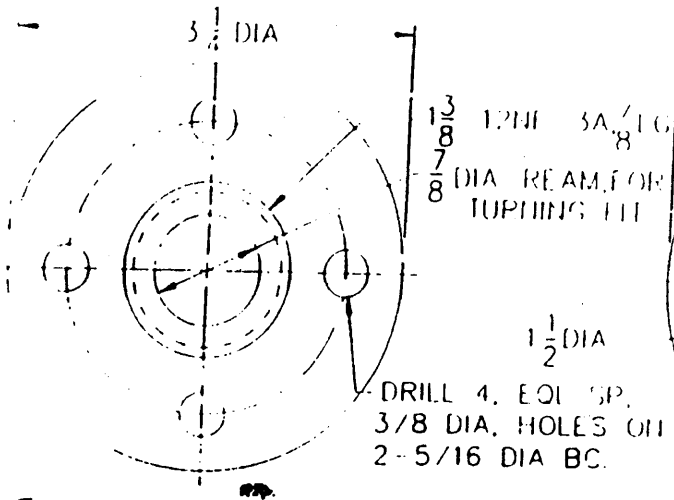

(23) FLANGE OF STUFFING BOX

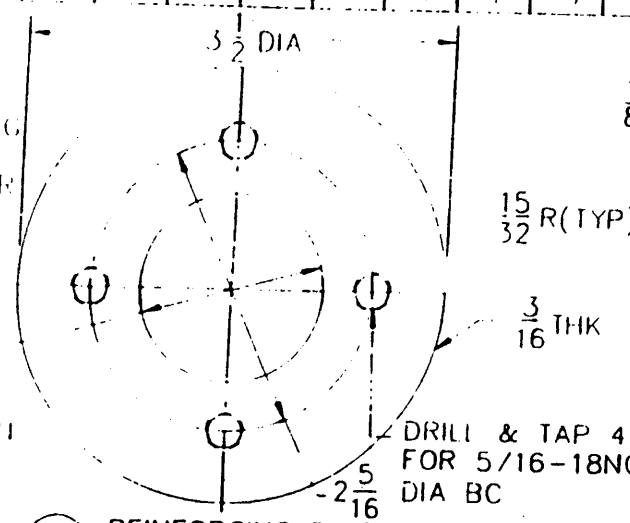

(22) REINFORCING RING

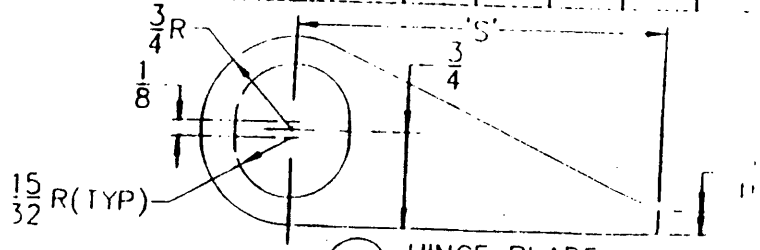

(13) HINGE BLADE

TYPE "M" COVER
TABLE OF DIMENSIONS
MISC DETAILS

DETAIL 104

DWG NO. 501-4870233	REV
STANDARD DETAILS	SHEET 109 OF 140

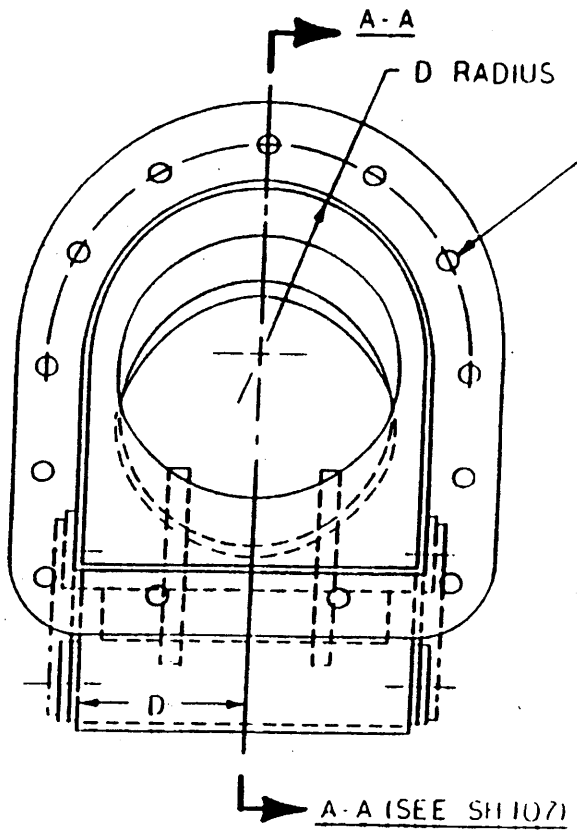

COVER ASSEMBLY
PLAN VIEW

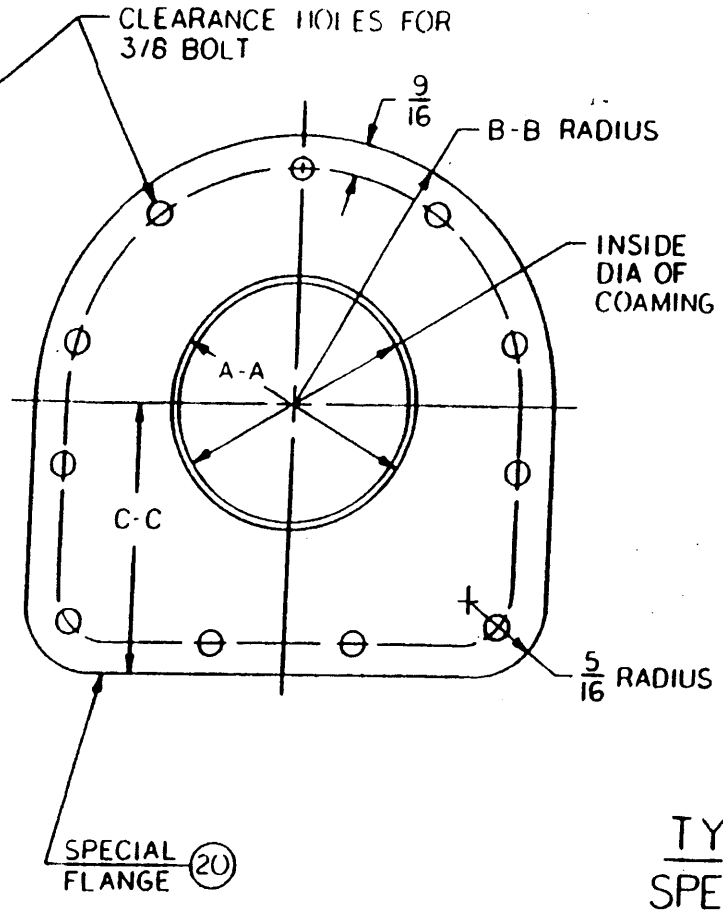

TABLE FOR
SPECIAL FLANGE
DIMENSIONS ARE IN INCHES

COAM INSIDE DIA	DIA AA	RAD BB	CC	NO OF HOLES
4	4 3/8	4 1/2	4 13/16	11
4 1/2	4 7/8	4 3/4	5	11
5	5 3/8	5	5 3/16	11
5 1/2	5 7/8	5 1/4	5 3/8	11
6	6 3/8	5 1/2	5 9/16	11
6 1/2	6 7/8	5 3/4	5 3/4	11
7	7 3/8	6	5 15/16	14
7 1/2	7 7/8	6 1/4	6 1/16	14
8	8 3/8	6 1/2	6 1/4	14
9	9 3/8	7	6 9/16	14
10	10 3/8	7 1/2	6 15/16	14
12	12 3/8	8 1/2	7 11/16	14

TYPE "M" COVER
SPECIAL FLANGE
ASSEMBLY PLAN VIEW

DETAIL 105

DWG NO 501-4870233	REV
STANDARD DETAILS	SHEET 110 OF 14

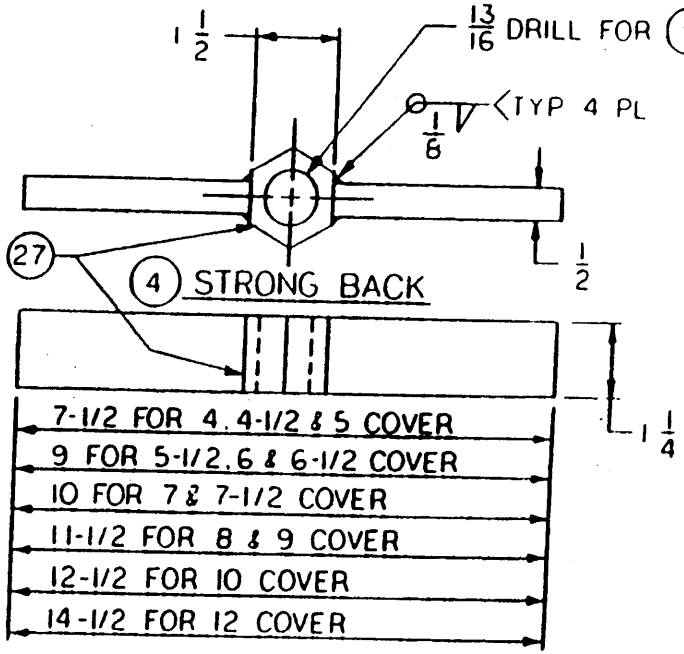

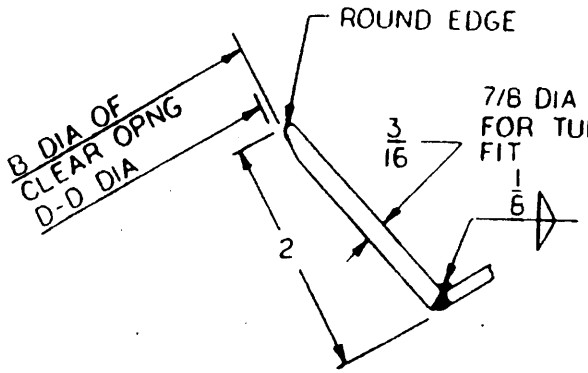

DETAIL OF VALVE SEAT

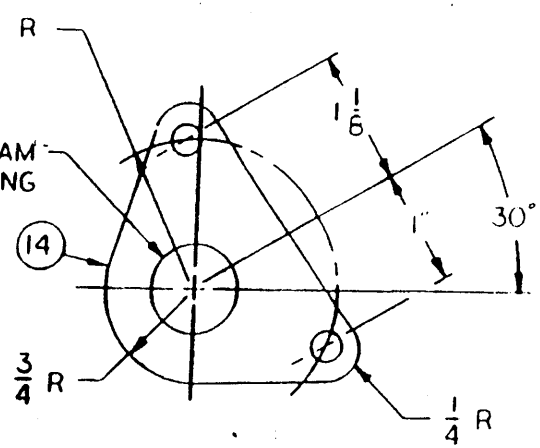

SPIDER-PLAN VIEW

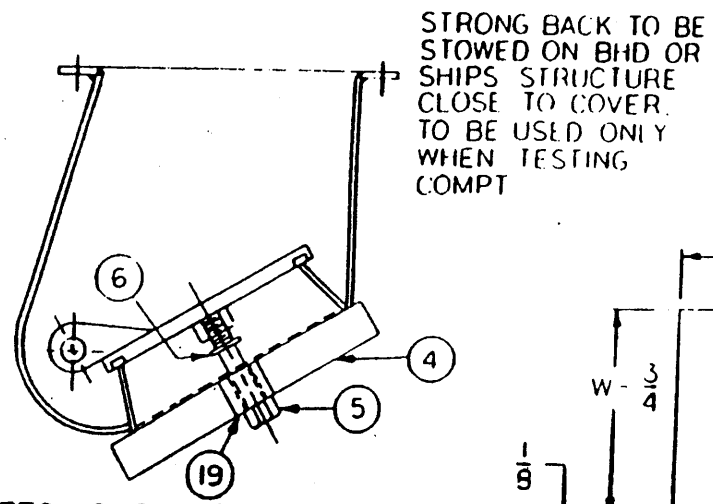

SKETCH SHOWING ATTACMENT OF STRONGBACK FOR TESTING COMPT

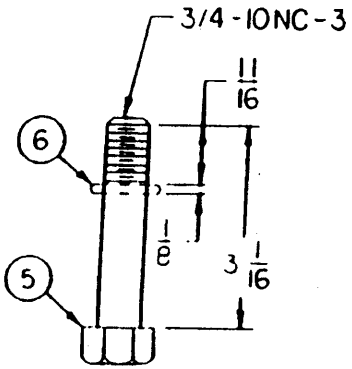

STRONGBACK BOLT

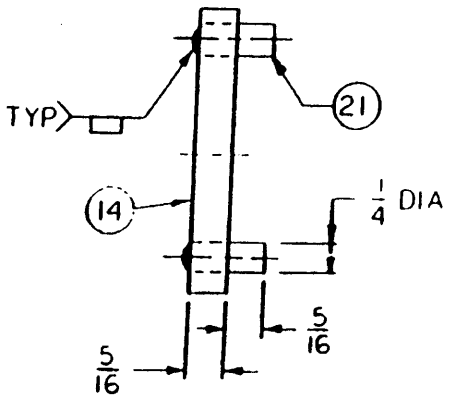

SPIDER-END VIEW

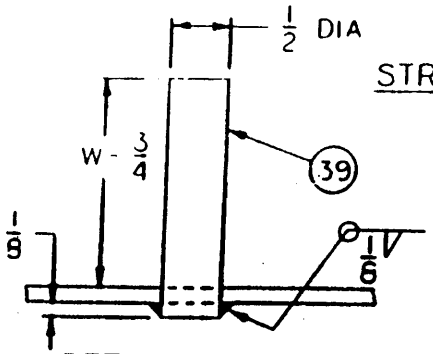

DETAIL OF STOP

TYPE "M" COVER MISC DETAILS

DETAIL 106	
DWG NO 501-4870233	REV
STANDARD DETAILS	SHEET 111 OF 140

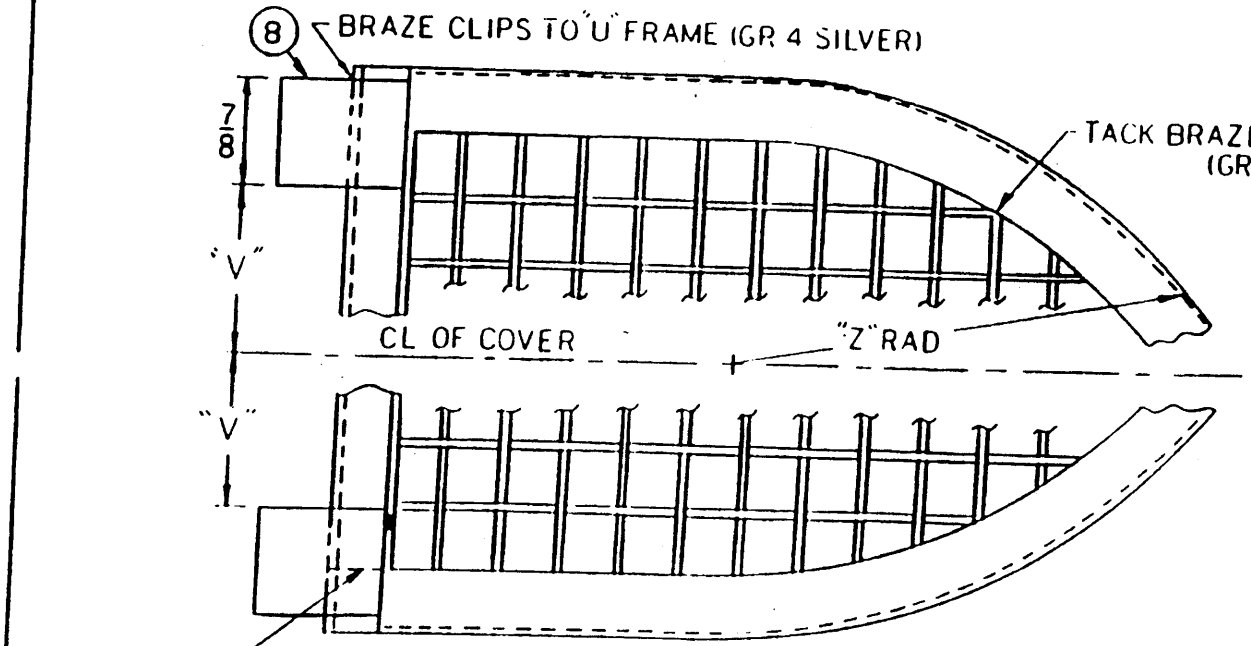

SCREEN & FRAME PLAN VIEW

NOTE
FOR "X", "V" AND "Z" DIMENSIONS SEE SHEET 109

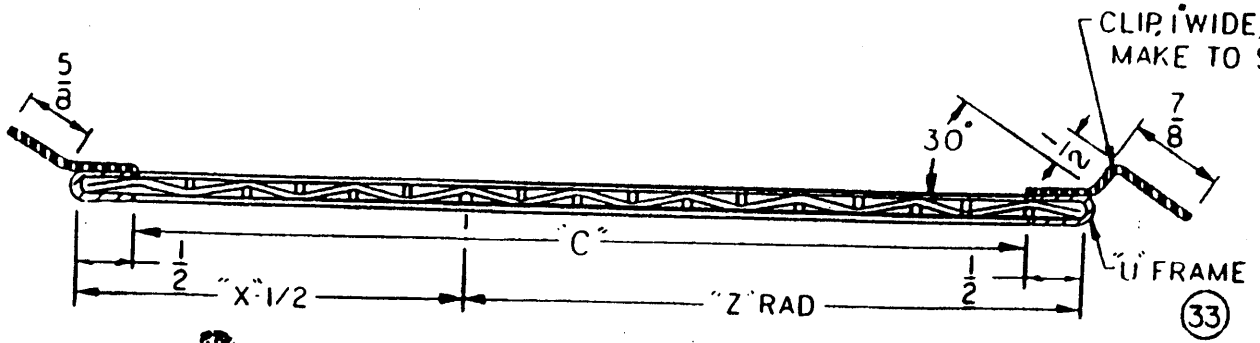

SCREEN & FRAME - SECTION VIEW

TYPE "M" COVER SCREEN & FRAME DETAILS

DETAIL 107	
DWG NO 501-4870233	REV
STANDARD DETAILS	SHEET 112 OF 14

HANDLE INSTALLATION PROCEDURE

1. TURN COVER SHAFT TO PLACE COVER IN OPEN POSITION (SEE SH 107). INSTALL HANDLE TO SHAFT, WITH ITEM 32. HANDLE IN OPEN POSITION AS SHOWN BELOW.
2. TRIM LENGTH OF STOP BAR TO PROVIDE 1/16 TO 1/8 CLEARANCE AS SHOWN IN SECTION C-C, SHEET 114.
3. WITH HANDLE IN OPEN POSITION (SPRING RETAINERS REMOVED) WELD STOP BAR TO VALVE BODY AS SHOW BELOW.
4. LOCATE OTHER STOP BAR SIMILARLY WITH HANDLE IN CLOSED POSITION.
5. MOUNT SPRING RETAINERS WITH 3/8 NUTS & BOLTS.
6. PROVIDE TOGGLE PIN AND WIRE ROPE TO 'M' COVER SHAFT WITH LOOP AND SLEEVE, ITEM 39.

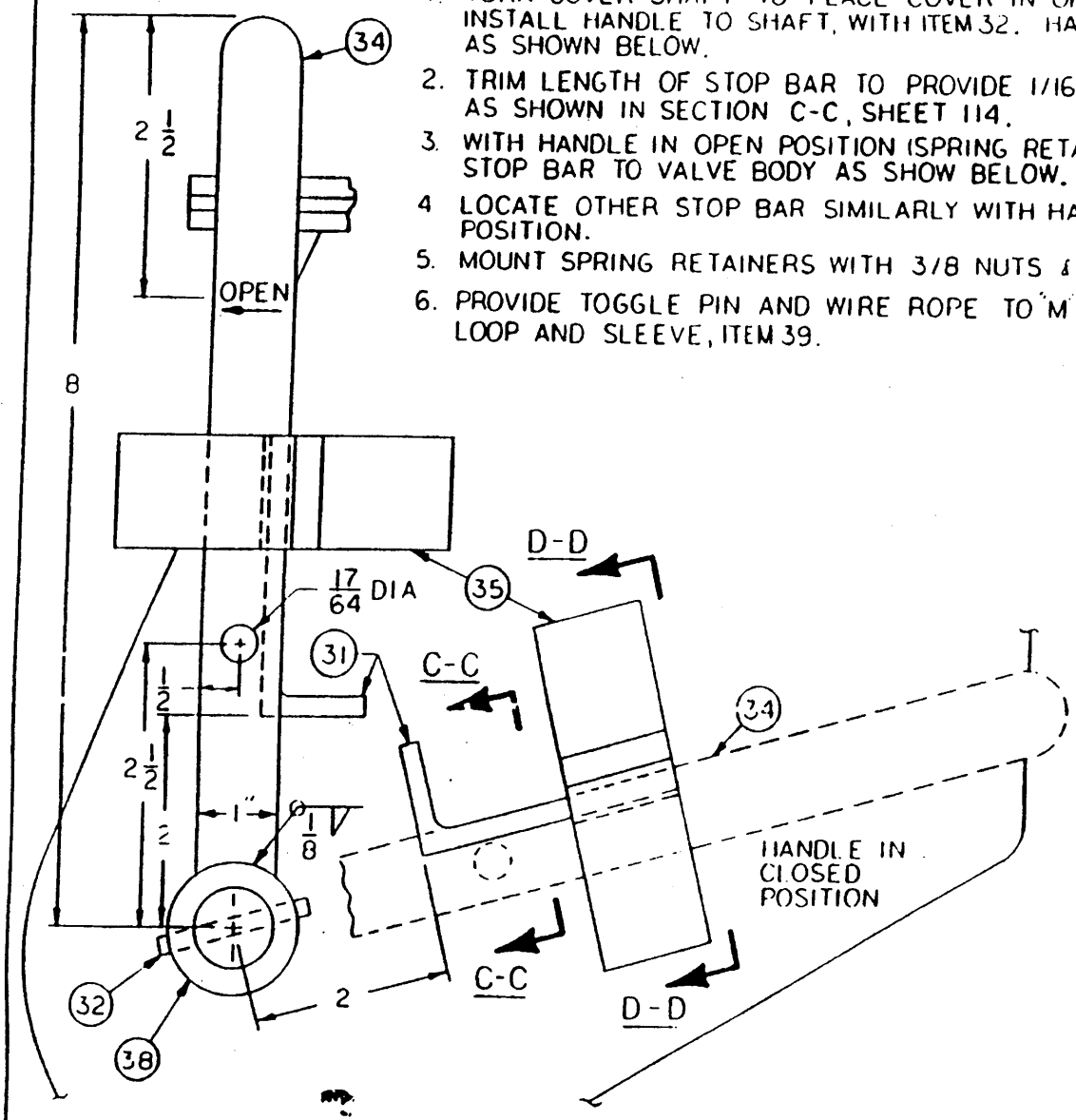

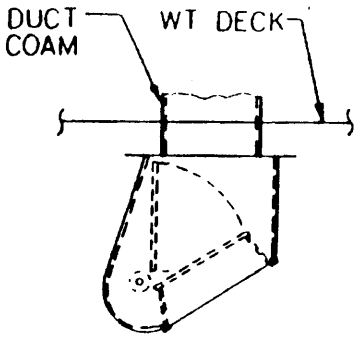

VERTICAL POSITION

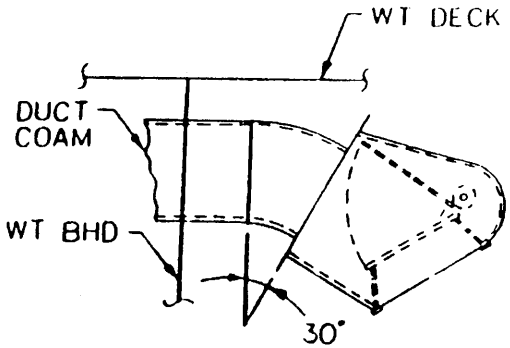

HORIZONTAL POSITION

TYPICAL INSTALLATION OF TYPE "M" COVER

DETAIL 108	
DWG NO 501-4870233	REV
STANDARD DETAILS	SHEET 113 OF 140

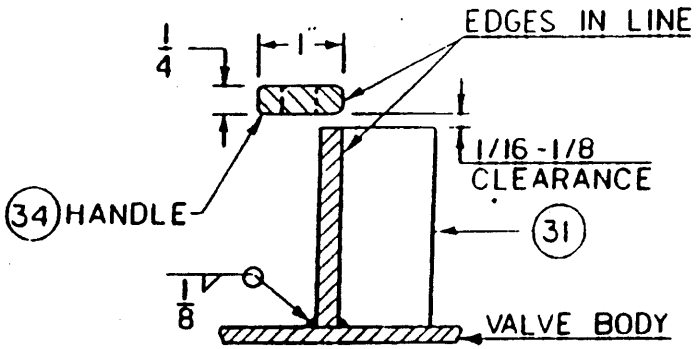

SECTION 'C-C'

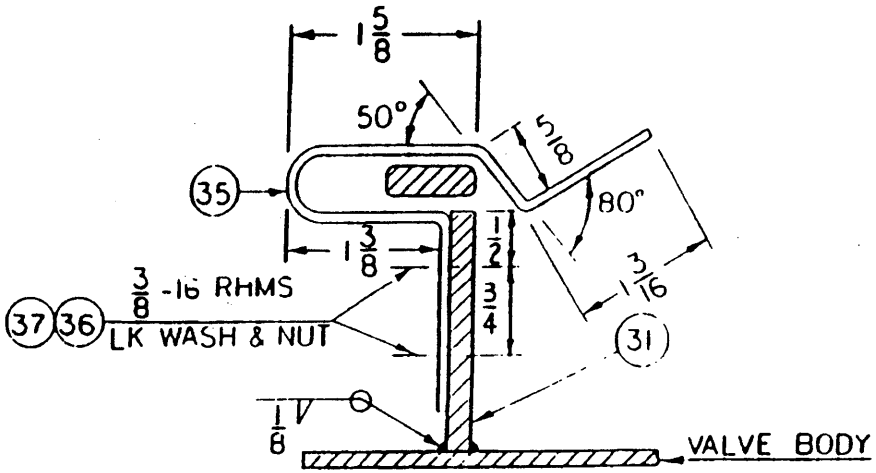

SECTION 'D-D'

SPRING RETAINER DETAIL

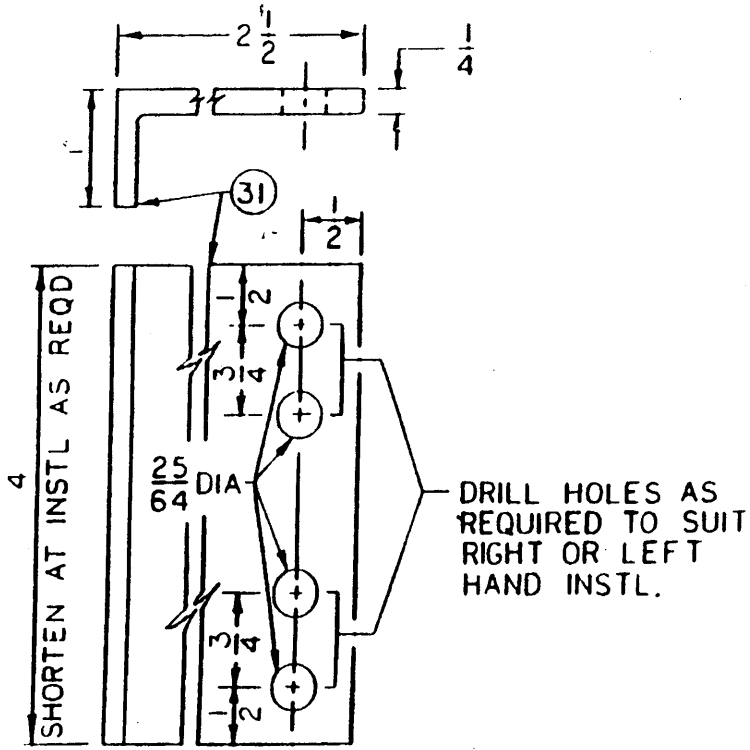

DETAIL OF STOP

TYPE "M" COVER HANDLE-MISC. DETAILS

DETAIL 109	
DWG NO 501-4870233	REV
STANDARD DETAILS	SHEET 114 OF 140

LIST OF MATERIAL

ITEM	DESCRIPTION	MATERIAL	MATL SPEC	REMARKS
1	MATL, HOOD	CRES	QQ-S-766 TY 304	2D FINISH, .062 THK
2	SHEATHING	CRES	QQ-S-766 TY 304	2D FINISH, .031 THK
3	SEALER, DUCT	VARIOUS	COMMERCIAL	3M SCOTCH SEAL OR EQUAL
4	ACCESS PL 6X6	CRES	QQ-S-766 TY 304	
5	ACCESS PL 4X6	CRES	QQ-S-766 TY 304	
6	ACCESS PL 7X3X6	CRES	QQ-S-766 TY 304	HINGLESS TYPE
7	ACCESS PL 7X3X6	CRES	QQ-S-766 TY 304	HINGLESS TYPE
8	RIVET, BLIND	CRES	MIL-R-2443/ID	
9	MATL, HOOD, .123 THK	AL	QQ-A-250/8	
10	MATL, HOOD, .080 THK	AL	QQ-A-250/8	
11	WIRE MESH, 1/2X1/2	GALV STEEL	RR-W-360	
12	HANGER, 1-1/2X1-1/2X3/16 ∠	STEEL	MIL-S-22698	
13	ROD, 1/2 DIA	STEEL	MIL-S-22698	FEMALE THD, (LG TO SUIT INSTL)
14	DUCT MATL, .125 THK	AL	QQ-A-250/8	ALY 5052, TEMPER H32
15	PIPE, 3/4 IPS SCHED 40	AL	WW-T-700/5	LENGTH TO SUIT INSTL
16	TERMINAL, BELMOUTH 6 DIA	AL	QQ-A-250/1	
17	BOLT, HEX HD, 1/4-20 NC 2	CRES	MIL-S-1222	
18	NUT, HEX, 1/4-20 NC 2	CRES	MIL-S-1222	
19	WASHER, LOCK SPRING	CRES	FF-W-84	

GENERAL NOTES

1. DEVIATIONS FROM THIS DRAWING ARE PERMITTED FOR DIFFERENT AIR QUANTITIES SHOWN IN TABLE 1.
2. THIS DRAWING DEVELOPED FROM NAVSEA DRAWING 53711-803-6397386 AND USES GUIDANCE OBTAINED FROM INDUSTRIAL VENTILATION MANUAL.
3. TEMPLATE EXHAUST HOOD FROM DISHWASHER. HOOD TO BE 1-1/2 WIDER THAN DISHWASHER OPENING.
4. ATTACH HOOD TO DISHWASHER BY SPOT WELDING OR USING BLIND RIVETS APPROXIMATELY 3 CENTERS, SEAL WITH ITEM 3.
5. ALL WELDING SHALL BE FABRICATED AND INSPECTED IN ACCORDANCE WITH MIL-STD 278.
6. SCULLERY TOTAL CFM NOT EXCEED 1/2 MINUTE RATE OF CHANGE. ADJUST AUXILIARY TERMINAL TOTAL TO SUIT.
7. DISHWASHER HOOD TO BE FABRICATED WATERTIGHT.
8. VERTICAL SLOT LENGTH TO BE 1/3 DISHWASHER OPENING HEIGHT, HORIZONTAL SLOT LENGTH TO BE EQUAL TO DISHWASHER OPENING WIDTH. SEE TABLE 1 FOR SLOT WIDTH.

LIST OF MATERIAL FOR HOODS DISHWASHER, LAUNDRY & CANOPY

DETAIL 110

DWG NO. 501-4870233 REV

STANDARD DETAILS SHEET 115 OF 140

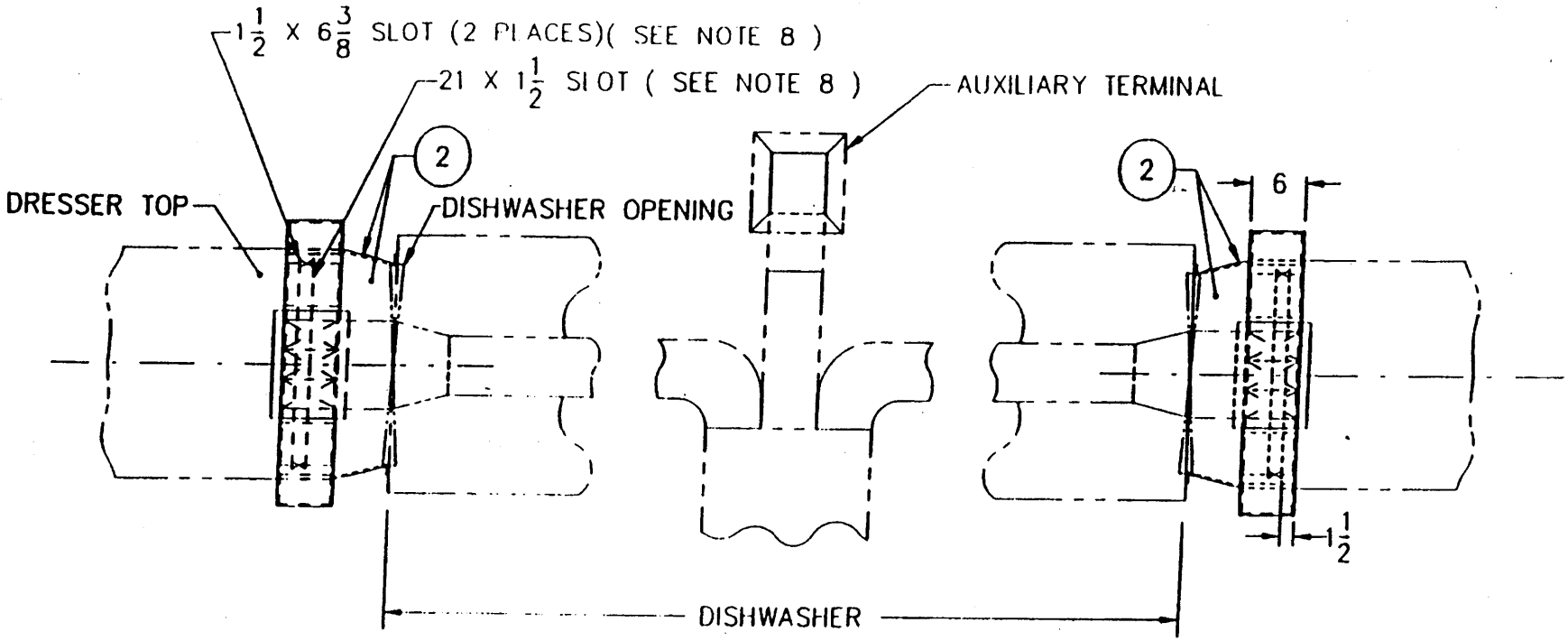

PLAN VIEW

TABLE 1

DISHWASHER		AUXILIARY TERMINAL	SCULLERY TOTAL	SLOT WIDTH	TOTAL HOOD PRESS LOSS
MODEL SIZE	A CFM	B CFM	CFM (NOTE 7)	INCHES	INCHES W G
250 DA	750	1500	3000	1-1/2	.62
185 DA	750	1350	2850	1-1/2	.62
135 DA	700	1200	2600	1-1/2	.55
85 DA	475	550	1500	1	.54
60 DA	475	450	1400	1	.54
RACKLESS	–	500	500	–	

DISHWASHER HOOD

DETAIL 111

DWG NO. 501-4870233 REV

STANDARD DETAILS SHEET 116 OF 140

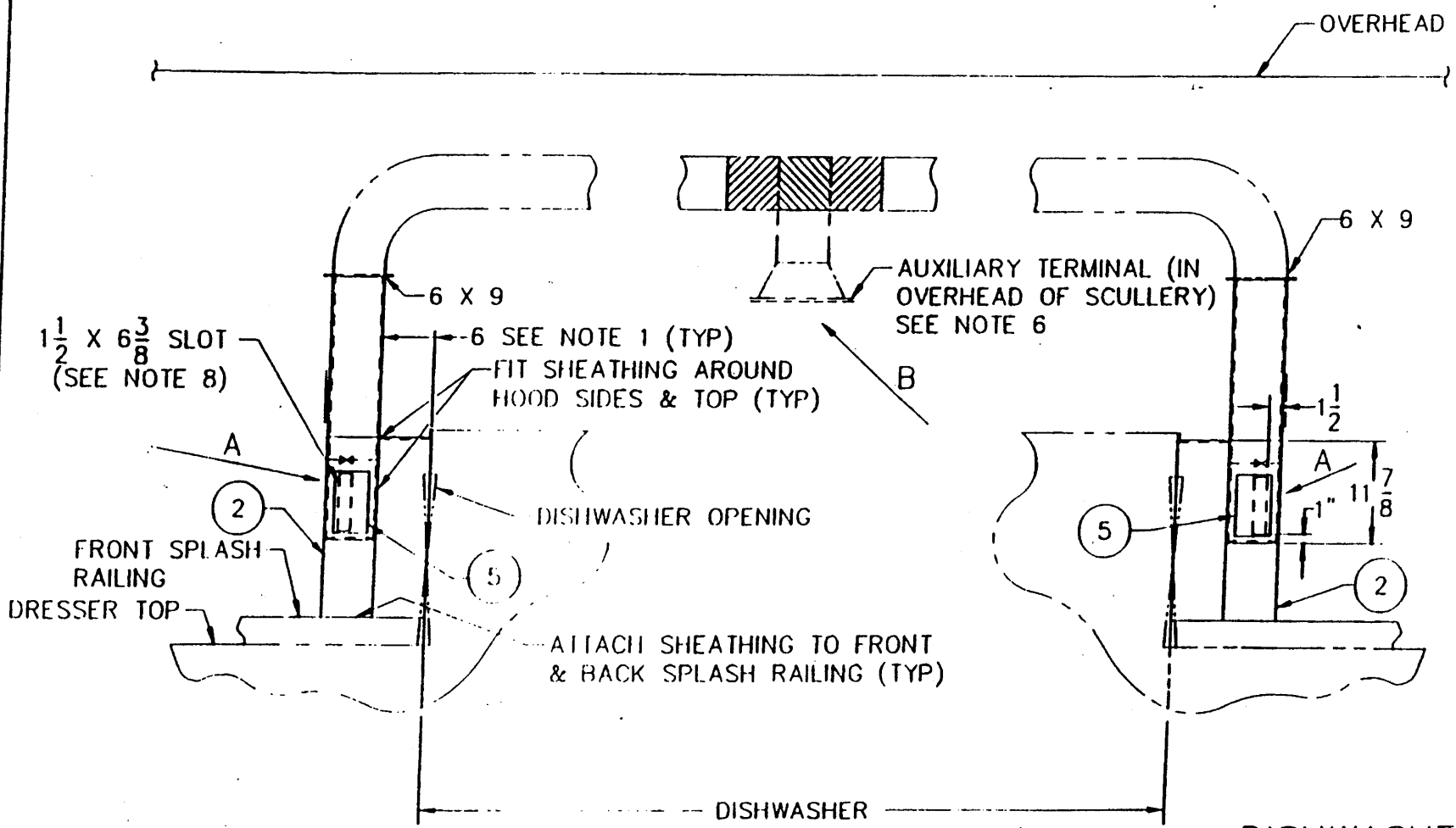

ELEVATION VIEW

DISHWASHER HOOD

DETAIL 112	
DWG NO. 501-4870233	REV
STANDARD DETAILS	SHEET 117 OF 140

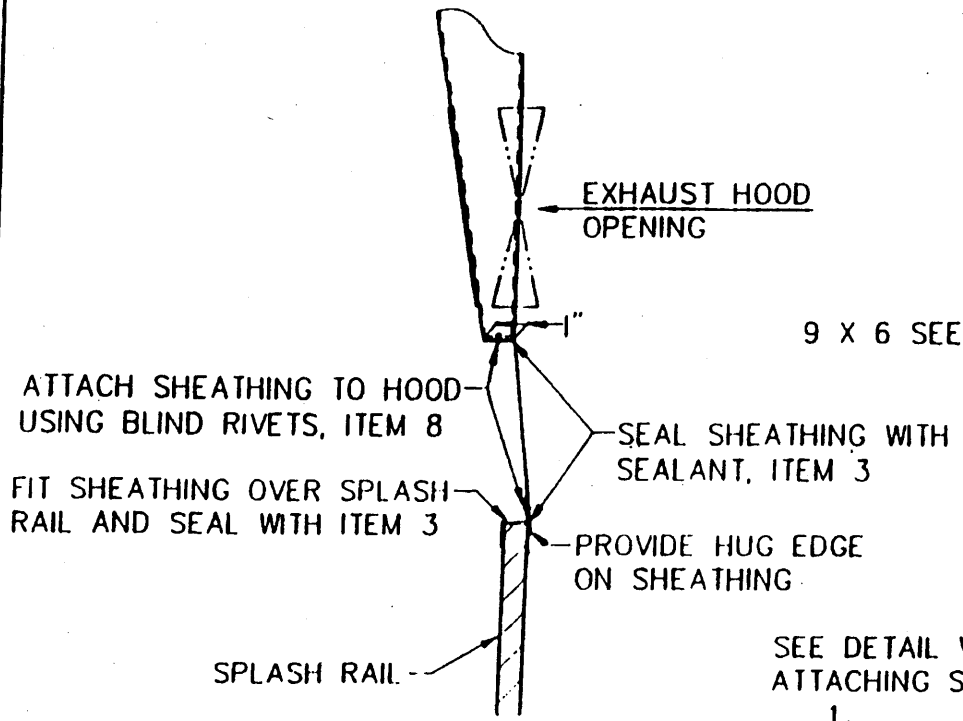

DETAIL VIEW

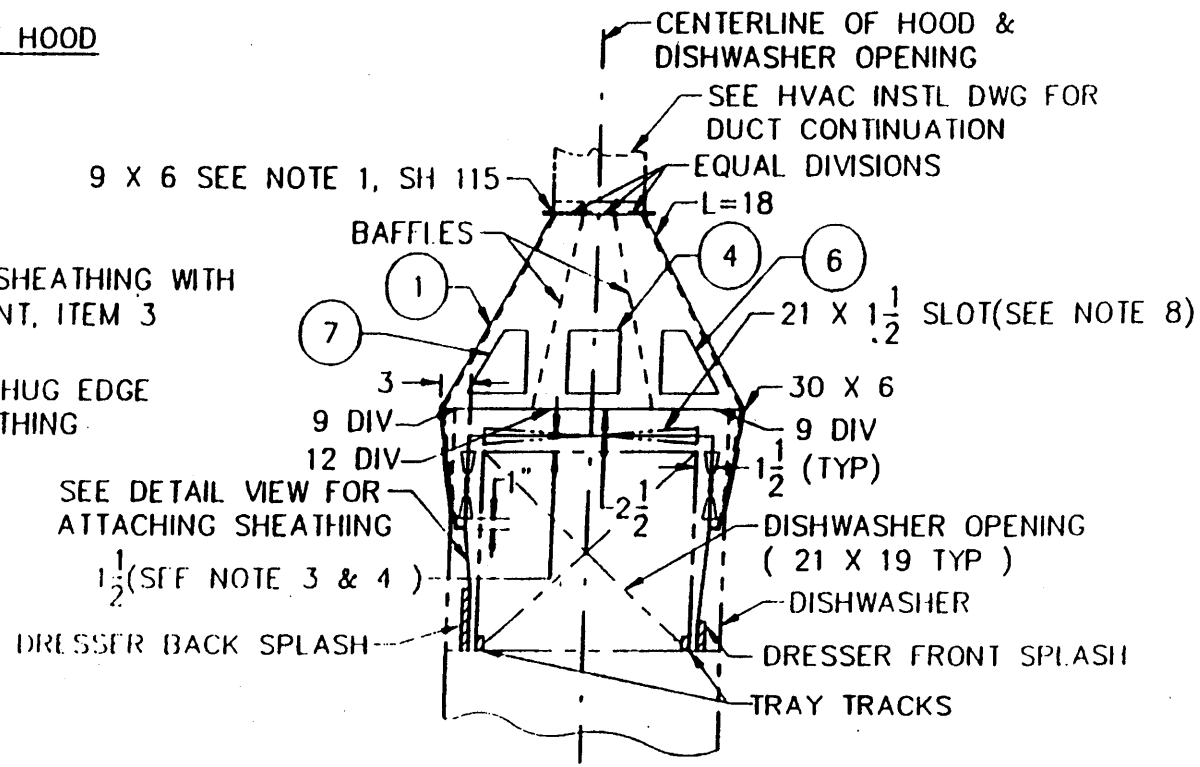

END VIEW

DISHWASHER HOOD

DETAIL 113	
DWG NO. 501-4870233	REV
STANDARD DETAILS	SHEET 118 OF 140

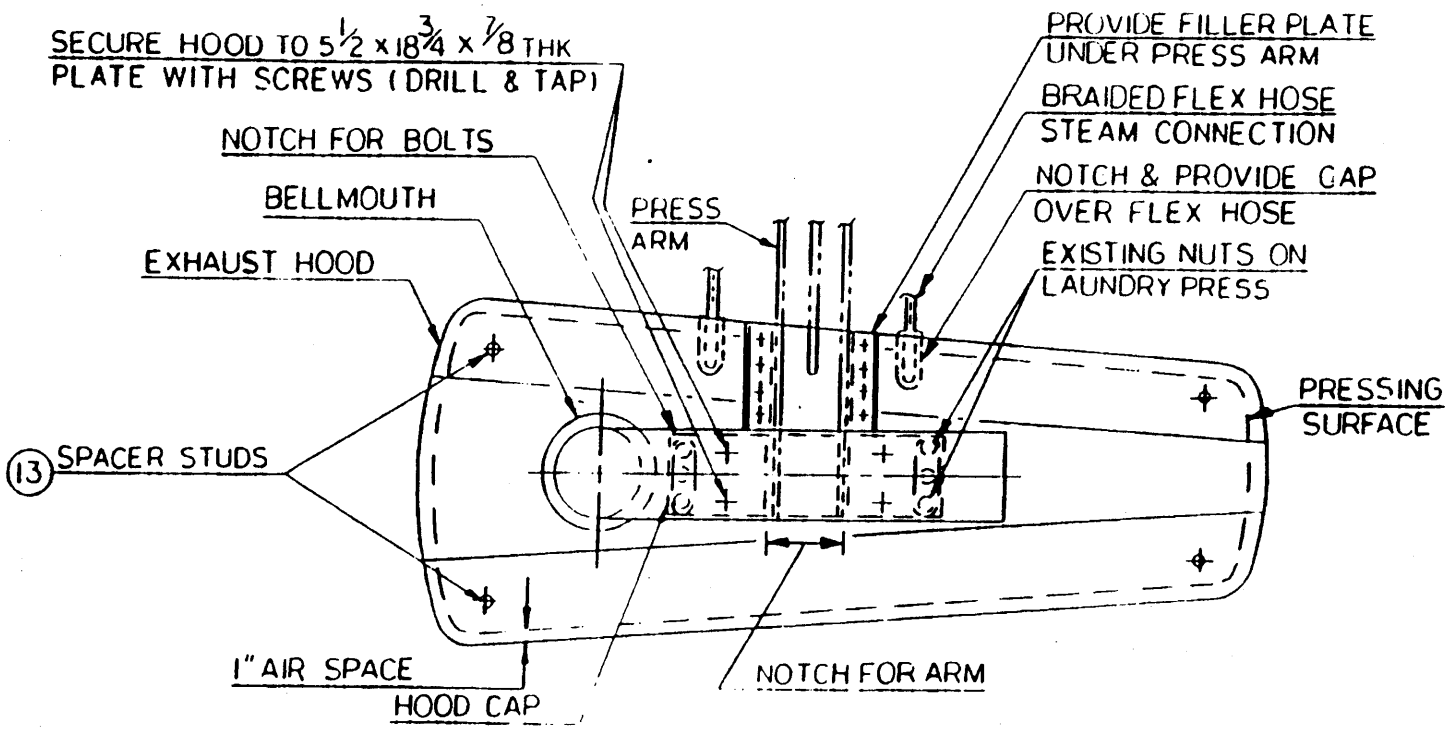

PLAN VIEW - LAUNDRY PRESS HOOD
PREFERRED INSTL

NOTES:

1. HOODS MUST BE TEMPLATED TO EACH PRESS.
2. ACCESS PLATES MUST BE PROVIDED IN HOODS SERVING PRESSES REQUIRING ADJUSTMENTS FROM THE TOP.

DETAIL 114	
DWG NO 501-4870233	REV
STANDARD DETAILS	SH 119 OF 140

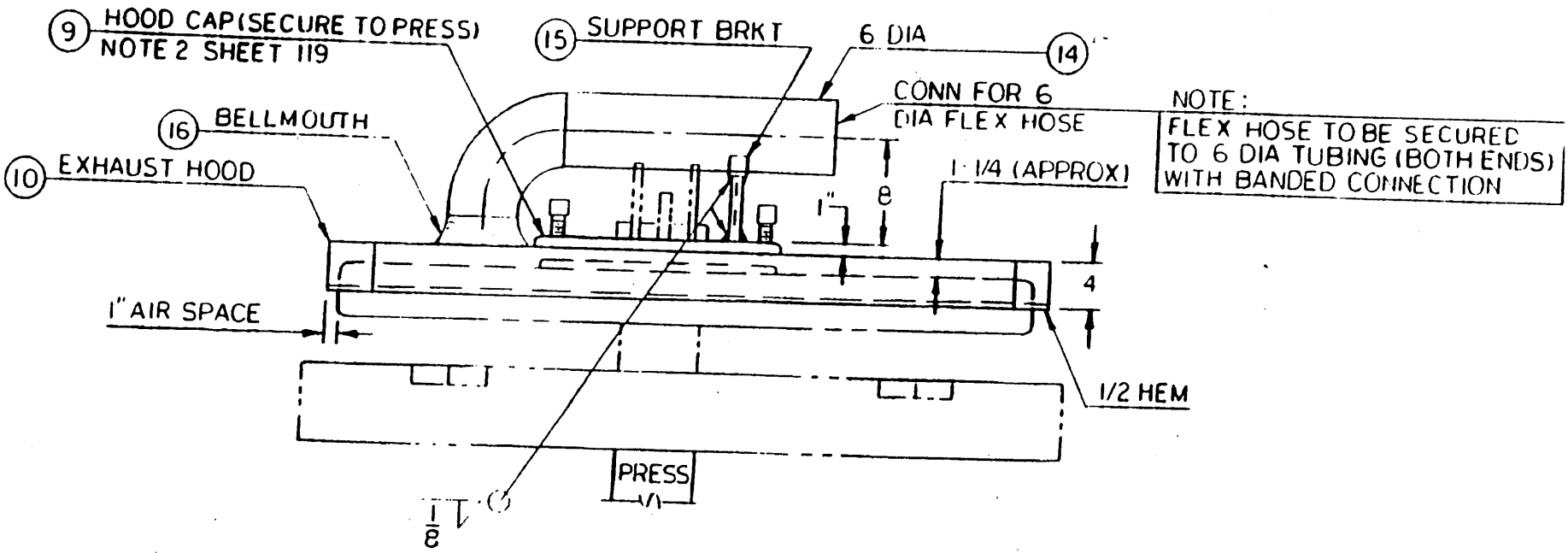

LAUNDRY PRESS HOOD
FRONT ELEVATION
PREFERRED INSTL

DETAIL 115

DWG NO 501-4870233	REV
STANDARD DETAILS	SH 120 OF 140

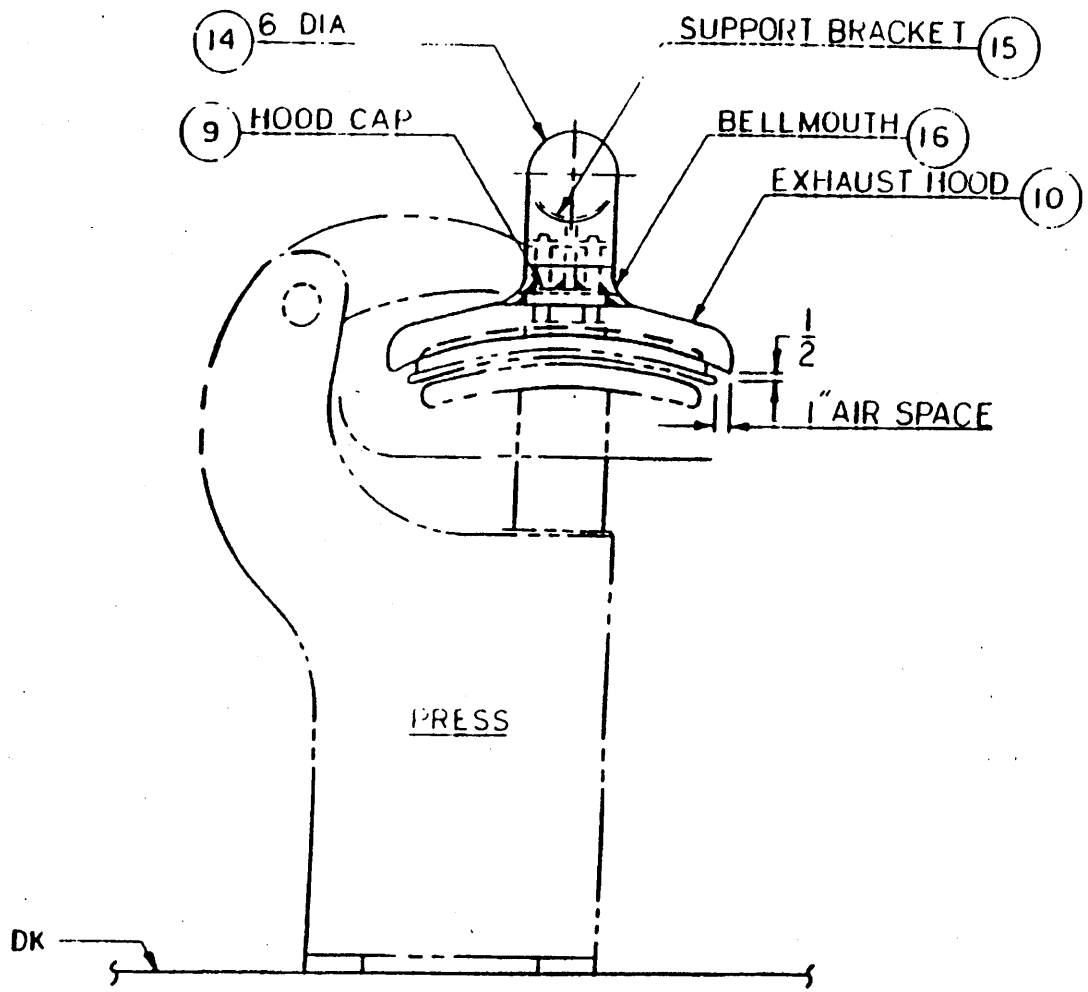

LAUNDRY PRESS HOOD
END ELEVATION
PREFERRED INSTL

DETAIL 116	
DWG NO. 501-4870233	REV
STANDARD DETAILS	SH 121 OF 140

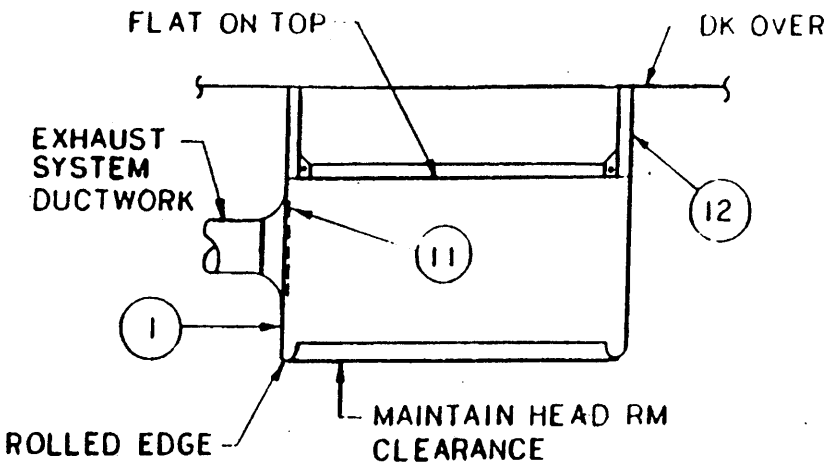

SECTION VIEW
CANOPY HOOD FLAT ON TOP

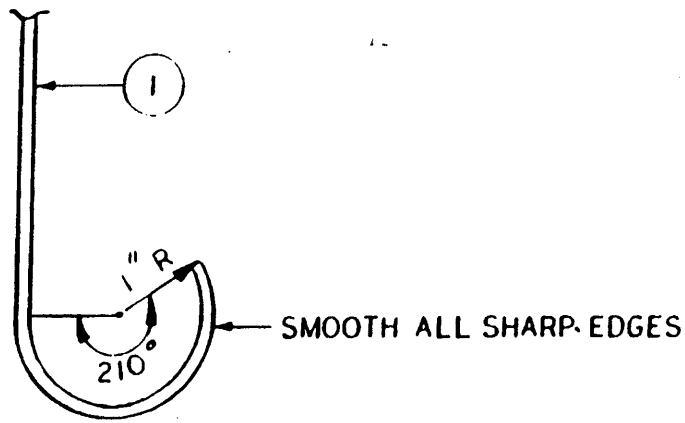

DETAIL ROLLED EDGE

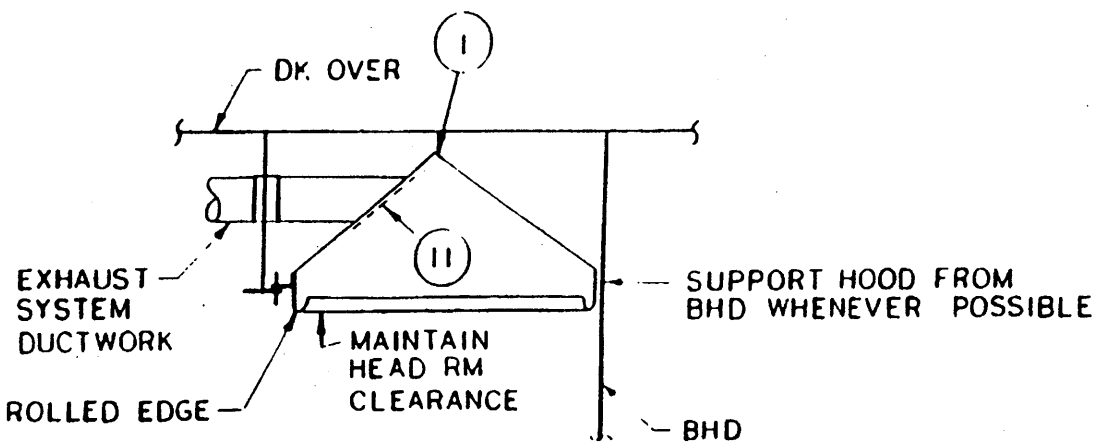

SECTION VIEW
CANOPY HOOD WITH SLOPED TOP

HOODS - CANOPY TYPICAL INSTALLATION & DETAILS

DETAIL 117

DWG NO 501-4870233	REV
STANDARD DETAILS	SH 122 OF 140

LIST OF MATERIAL

ITEM NO	DESCRIPTION	STEEL COVER MATERIAL	STEEL COVER MATERIAL SPEC	ALUMINUM COVER MATERIAL	ALUMINUM COVER MATERIAL SPEC	REMARKS
1	COVER PLATE	.125 THK	ASTM 569	.1875 THK	ASTM B 209, 5086, H116	
2	COVER PLATE	.1875 THK	ASTM 569	.25 THK		
3	HINGE PAD	.50 THK	MIL-S-22698	.75 THK		
4	STIFFNER WEB	.125 THK	ASTM 569	.1875 THK		
5	STIFFNER WEB	.125 THK	ASTM 569	.1875 THK		SEE SHEET 129
6	GASKET (MOLDED)	SYN RBR	MIL-R-900	SYN RBR	MIL-R-900	MEDIUM SOFT
7	COVER EDGE STRIP, 5/8 WIDE	.125 THK	ASTM 569	.1875 THK	ASTM B 209, 5086, H116	LENGTH TO SUIT
8	COVER EDGE STRIP, 1 WIDE	.125 THK	ASTM 569	.1875 THK		LENGTH TO SUIT
9	RETAINING STRIP, 5/8 WIDE	.125 THK	ASTM 569	.1875 THK		LENGTH TO SUIT
10	RETAINING STRIP, 3/4 WIDE	.125 THK	ASTM 569	.1875 THK		LENGTH TO SUIT
11	STAPLE, 1/4 DIA ROD	STEEL	MIL S-22698	AL	QQ-A-250/8	LENGTH TO SUIT
12	COLLAR	.062 THK	ASTM 569	.062 THK	QQ-A-250/8	
13	COLLAR	.062 THK	ASTM 569	.062 THK	QQ-A-250/8	
14	SPRING PIN, 5/32 DIA X 2 LONG	CRES	MS 171572	CRES	MS171572	CUT LENGTH TO SUIT
15	COAMING	.125 THK	ASTM 569	.1875 THK	ASTM B 209, 5086, H116	
16	STRONGBACK LUG	.1875 THK	ASTM 569	.25 THK		
17	STRONGBACK LUG	.25 THK	MIL-S-22698	.375 THK		
18	HINGE BLADE	.25 THK	MIL-S-22698	.375 THK		
19	SPRING PIN, 3/8 DIA X 2 LONG	CRES	MS 171722	CRES	MS 171722	CUT LENGTH TO SUIT
20	WIRE MESH SCREEN, 1-1/2 GALVANIZED	STEEL	RR-W-360	STEEL	RR-W-360	TY III, CL 2, 1/8 DIA WIRE
21	STRONGBACK 3/16 X 1 F.B.	STL BLK	MIL-S-22698	STL BLK	MIL-S-20166	
22	WEB (STEEL)	.125 THK	ASTM 569	.125 THK	ASTM 569	
23	BOSS, 1 DIA X 3/4 LONG	STL BAR	MIL-S-22698	STL BAR	MIL-S-20166	
24	STRONGBACK	STL PL	MIL-S-22698	STL PL	MIL-S-22698	SEE SH 127 FOR THK & DIM
25	WEB	STL PL	MIL-S-22698	STL PL	MIL-S-22698	SEE SH 127 FOR THK & DIM
26	BOSS, 1-1/2 DIA	STL BAR	MIL-S-22698	STL BAR	MIL-S-20166	FOR LG SEE SH 127
27	HANDLE, 1/2 DIA X 3-1/2 LG	CRES	QQ-S-763	CRES	QQ-S-763	CL 304, CONDITION A
28	BOLT, 1/2-13 NC 2	CRES	MIL-S-1222	CRES	MIL-S-1222	CL 304
29	HANDLE, 1/2 DIA X 6 LONG	CRES	QQ-S-763	CRES	QQ-S-763	CL 304, CONDITION A

LIST OF MATERIAL CONTD ON SHEET 124

LIST MATERIAL FOR TYPE "F" COVERS

DETAIL 118

DWG NO. 501-4870233 REV

STANDARD DETAILS

LIST OF MATERIAL

ITEM NO	DESCRIPTION	STEEL COVER MATERIAL	STEEL COVER MATERIAL SPEC	ALUMINUM COVER MATERIAL	ALUMINUM COVER MATERIAL SPEC	REMARKS
30	BOLT, 3/4 - 10 NC 2	CRES	MIL-S-1222	CRES	MIL-S-1222	CL 304
31	HOOK, 1/4 DIA ROD	STEEL	MIL-S-22698	AL	QQ-A-200/8	LENGTH TO SUIT
32	PAD, 3/16 X 1 F.B.	STEEL	MIL-S-22698	AL	6061-T6	LENGTH TO SUIT
33	BOSS, ELECTRICAN, 5/8 LONG	STEEL	MIL-S-22698	AL	QQ-A-200/8	THREAD: 1/4-20NC2
34	"U" BAR, 3/4, ZINC PLATED	STEEL	QQ-S-775	STEEL	QQ-S-775	MFR FROM .062 THK PL
35	SCREW, HEX HEAD, 1/4-20NC2	STEEL	MIL-S-1222	STEEL	MIL-S-1222	ZINC PLATED
36	WIRE MESH SCREEN, 1/2 GALV	STEEL	RR-W-360	STEEL	RR-W-360	TY 1, CL 1, 1/16 DIA WIRE

NOTES - TYPE "F" COVERS

1. AFTER FINAL ASSEMBLY OF COVER, SHOP SHALL CHALK TEST THE GASKET TO THE GASKET SEAT. THE CHALK IMPRESSION ON THE GASKET SHALL BE CONTINIOUS AROUND THE CIRCUMFERENCE.
2. CARE SHALL BE EXERCISED DURING WELDING AND ASSEMBLY TO ENSURE ACCURACY.
3. RUBBER GASKET, ITEM NUMBER 6, TO BE CEMENTED TO COVER.
4. SCREEN TO BE INSTALLED IN COAMING OF COVER ONLY IF SPECIFIED ON VENTILATION SYSTEM DRAWING.
5. RECTANGULAR COVERS TO BE FABRICATED WITH EITHER RADIUS OR SQUARE CORNERS AS SPECIFIED ON VENTILATION SYSTEM DRAWING.
6. HINGE LOCATIONS FOR RECTANGULAR COVERS ARE TYPE 'L' FOR LONG SIDE AND TYPE 'S' FOR SHORT SIDE
7. WHEN ORDERING RETANGULAR COVERS SPECIFY MATERIAL, DEPTH, HINGE LOCATION, RADIUS OR SQUARE CORNERS AND SCREEN (IF REQUIRED). EXAMPLE: TYPE 'F' COVER, STEEL, 15 X 10 RETANGULAR 3 RADIUS CORNER, HINGE LOCATION 'L', WITH 1 1/2 WIDE MESH SCREEN.
8. SUB ASSEMBLIES (COVER PLATE ASSEMBLY, COAMING ASSEMBLY, AND STRONGBACK) TO BE GALVANIZED AFTER WELDING.
9. SHARP EDGES TO BE ROUNDED TO PREVENT INJURY TO PERSONNEL.
10. INSERT BOLT THRU STRONGBACK BEFORE BEFORE HANDLE IS WELDED TO BOLT.
11. VENTILATION SYSTEM DRAWING SHALL SPECIFY EITHER STEEL OR ALUMINUM COVER.

LIST OF MATERIAL AND NOTES FOR TYPE "F" COVERS

DETAIL 119

DWG NO. 501-4870233 REV

STANDARD DETAILS SHEET 124 OF 140

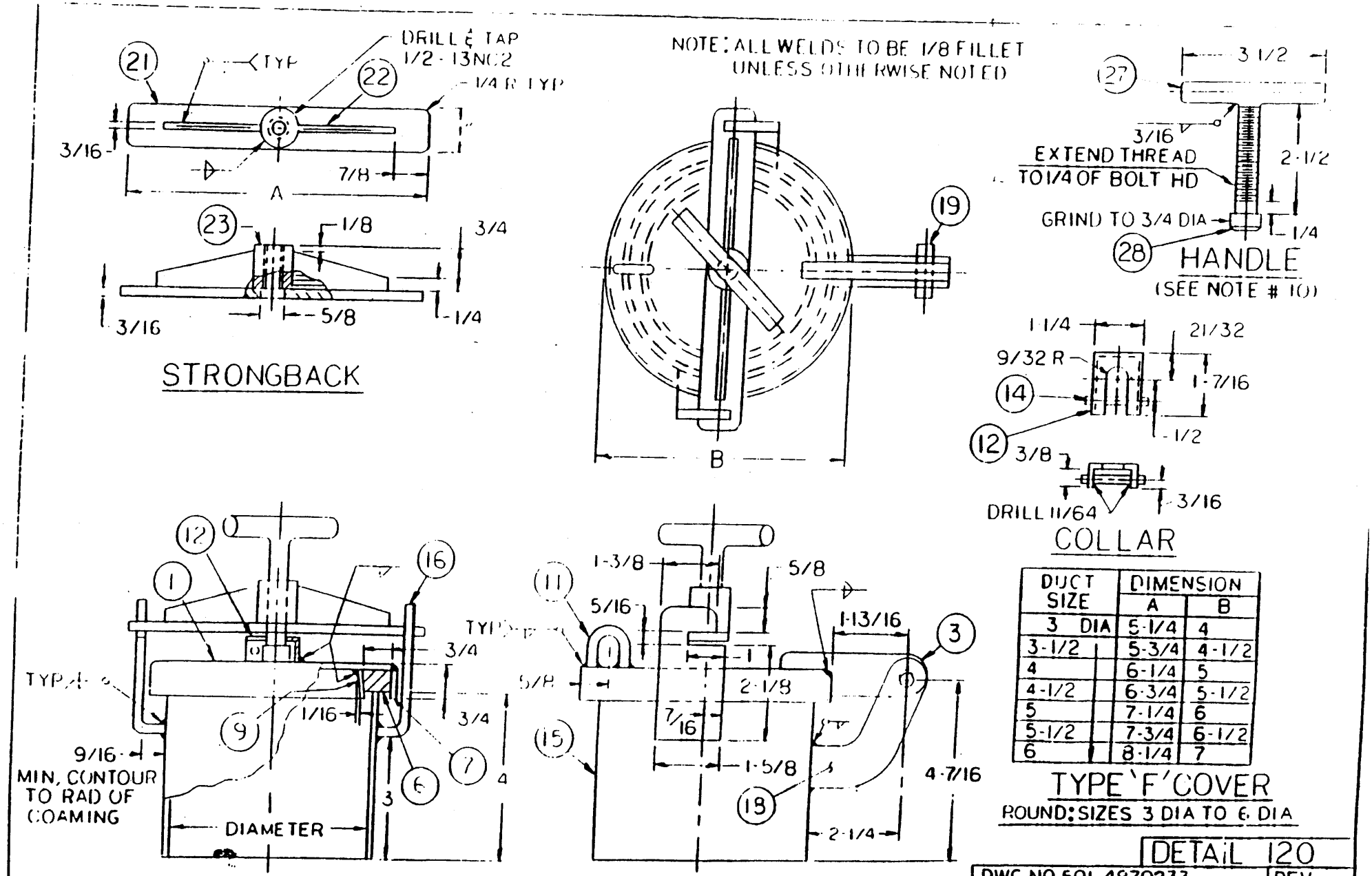

DUCT SIZE	DIMENSION A	DIMENSION B
3 DIA	5-1/4	4
3-1/2	5-3/4	4-1/2
4	6-1/4	5
4-1/2	6-3/4	5-1/2
5	7-1/4	6
5-1/2	7-3/4	6-1/2
6	8-1/4	7

TYPE 'F' COVER

ROUND: SIZES 3 DIA TO 6 DIA

DETAIL 120

DWG NO 501-4870233 REV

STANDARD DETAILS SH 125 OF 140

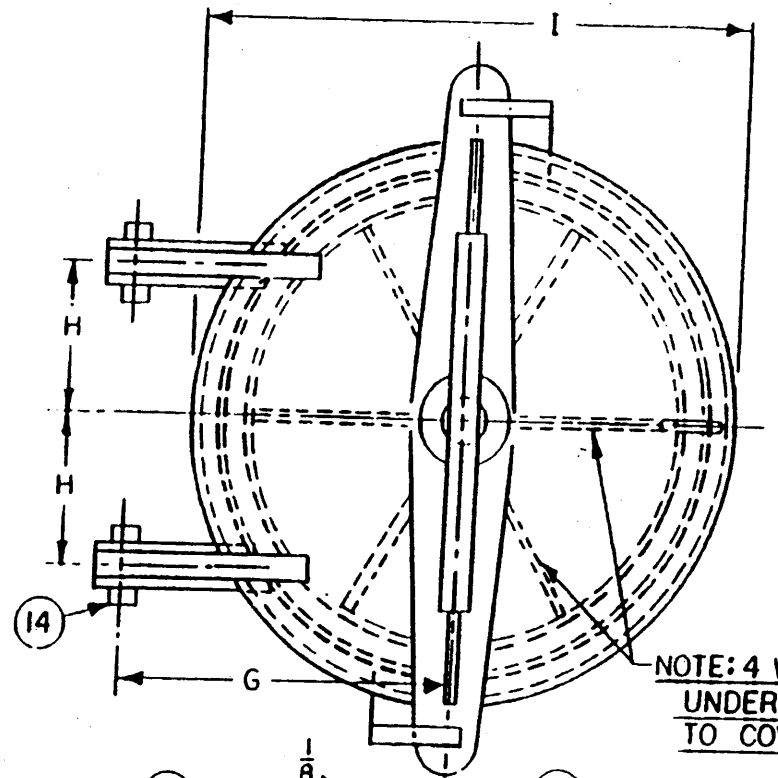

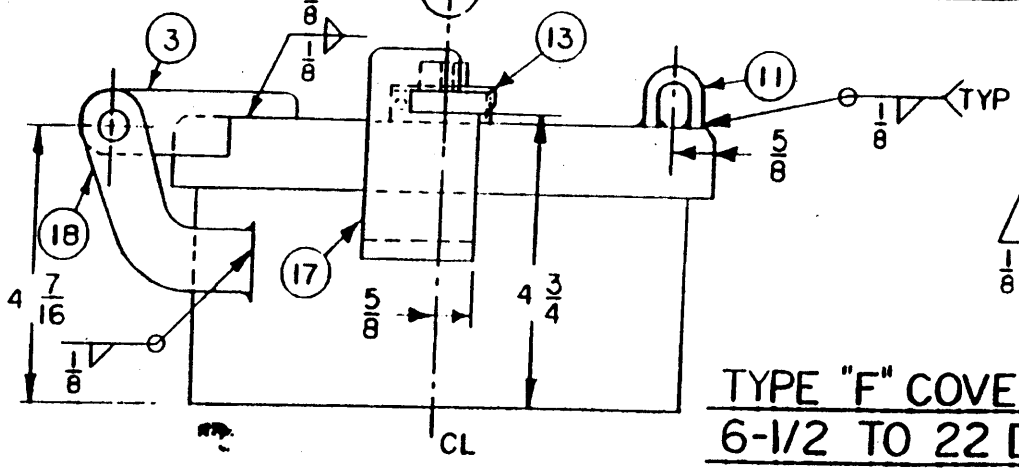

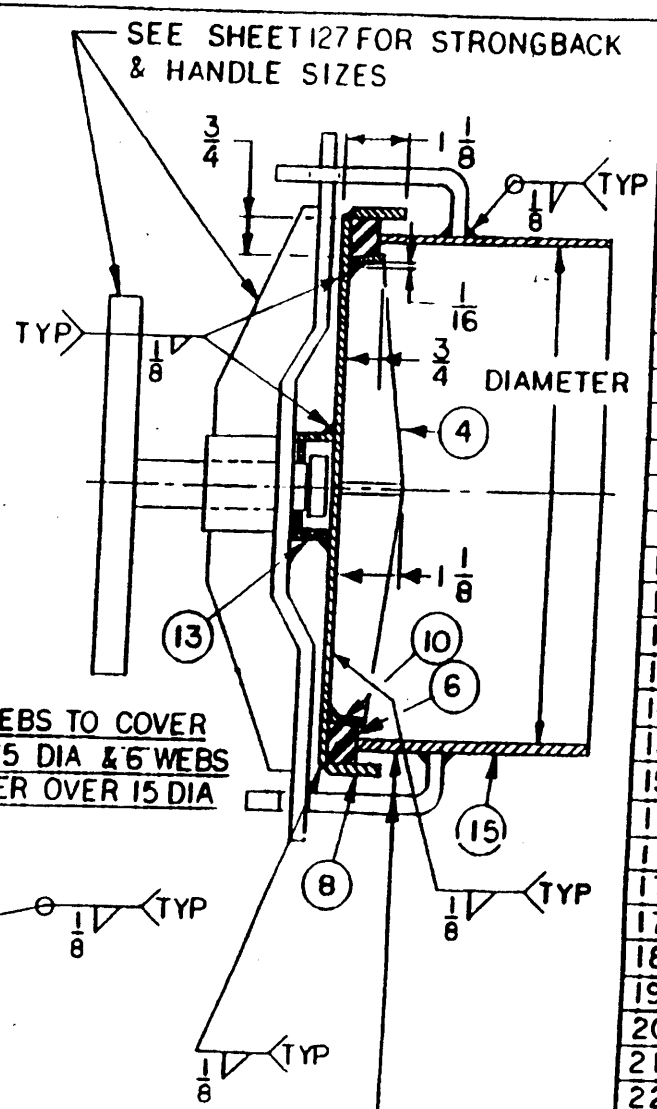

ROUND 6 1/2 TO 22 DIA			
DIA	G	H	I
6-1/2	4-15/16	2	7-5/8
7	5-3/16	2-1/8	8-1/8
7-1/2	5-7/16	2-1/4	8-5/8
8	5-5/8	2-3/8	9-1/8
8-1/2	5-7/8	2-1/2	9-5/8
9	6-1/8	2-5/8	10-1/8
9-1/2	6-5/16	2-3/4	10-5/8
10	6-9/16	2-7/8	11-1/8
10-1/2	6-13/16	3	11-5/8
11	7-1/16	3-1/8	12-1/8
11-1/2	7-5/16	3-1/4	12-5/8
12	7-9/16	3-3/8	13-1/8
12-1/2	7-13/16	3-1/2	13-5/8
13	8-1/16	3-5/8	14-1/8
13-1/2	8-5/16	3-3/4	14-5/8
14	8-9/16	3-7/8	15-1/8
14-1/2	8-13/16	4	15-5/8
15	9-1/16	4-1/8	16-1/8
15-1/2	9-5/16	4-3/16	16-5/8
16	9-9/16	4-1/4	17-1/8
16-1/2	9-13/16	4-3/8	17-5/8
17	10-1/16	4-1/2	18-1/8
17-1/2	10-5/16	4-5/8	18-5/8
18	10-9/16	4-3/4	19-1/8
19	11-1/16	5	20-1/8
20	11-9/16	5-1/4	21-1/8
21	12-1/16	5-1/2	22-1/8
22	12-9/16	5-3/4	23-1/8

TYPE "F" COVER
6-1/2 TO 22 DIA

DETAIL 121

DWG 501-4870233 REV

STANDARD DETAILS SH 126 OF 140

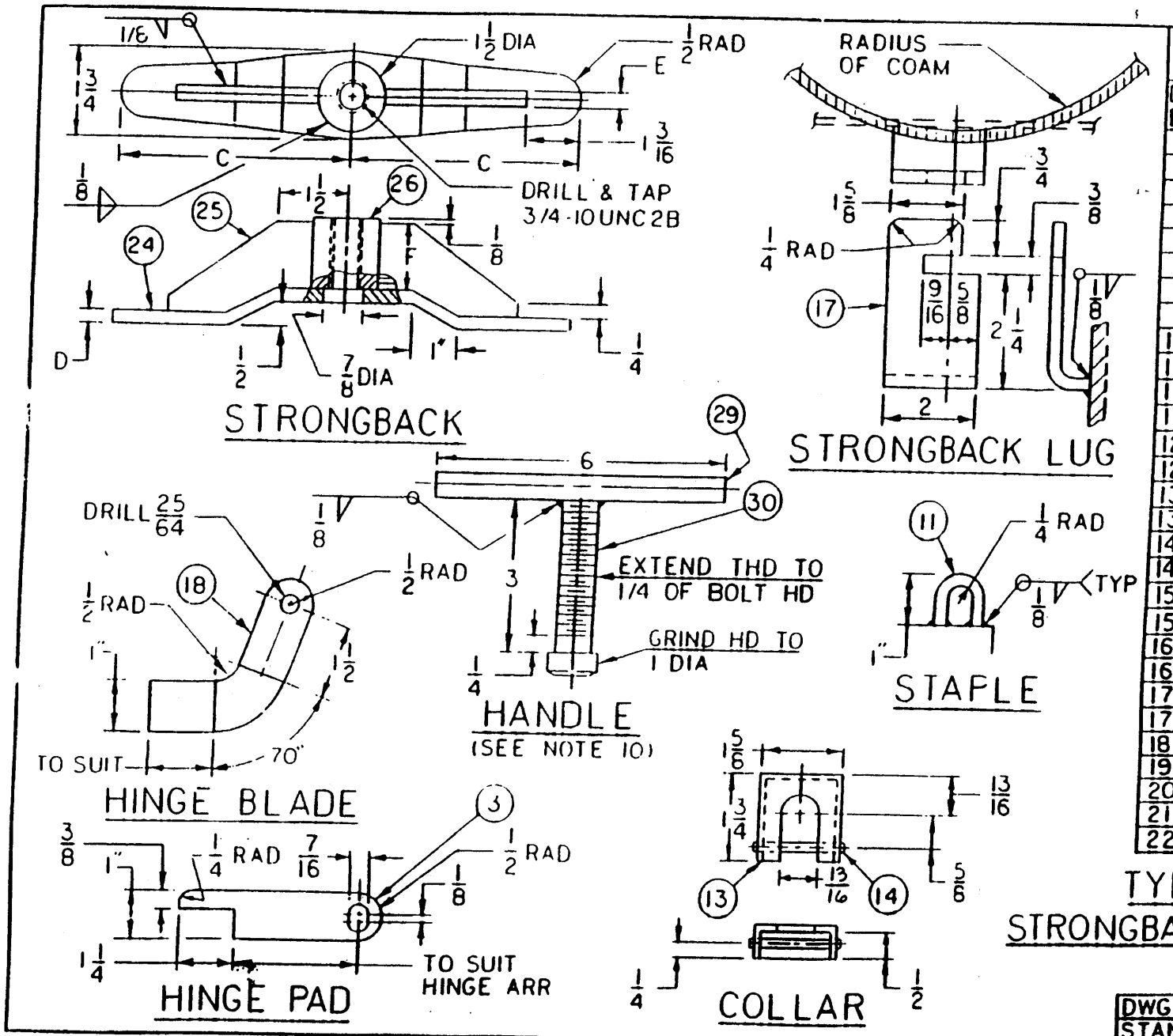

STRONGBACK

DIA OR DEPTH	C	D	E	F
6	4-5/8	3/16	3/16	1-1/16
6-1/2	4-7/8			
7	5-1/8			
7-1/2	5-3/8			
8	5-5/8			
8-1/2	5-7/8	1/4		
9	6-1/8			
9-1/2	6-3/8			
10	6-5/8			1-1/4
10-1/2	6-7/8			
11	7-1/8			
11-1/2	7-3/8			
12	7-5/8	5/16	1/4	
12-1/2	7-7/8			
13	8-1/8			
13-1/2	8-3/8			
14	8-5/8			
14-1/2	8-7/8			1-1/2
15	9-1/8			
15-1/2	9-3/8		5/16	
16	9-5/8			
16-1/2	9-7/8			
17	10-1/8			
17-1/2	10-3/8			
18	10-5/8			
19	11-1/8			
20	11-5/8			
21	12-1/8			
22	12-5/8			

TYPE "F" COVER
STRONGBACK & HINGE DETAILS

DETAIL 122

DWG NO 501-4870233	REV
STANDARD DETAILS	SHEET 127 OF 140

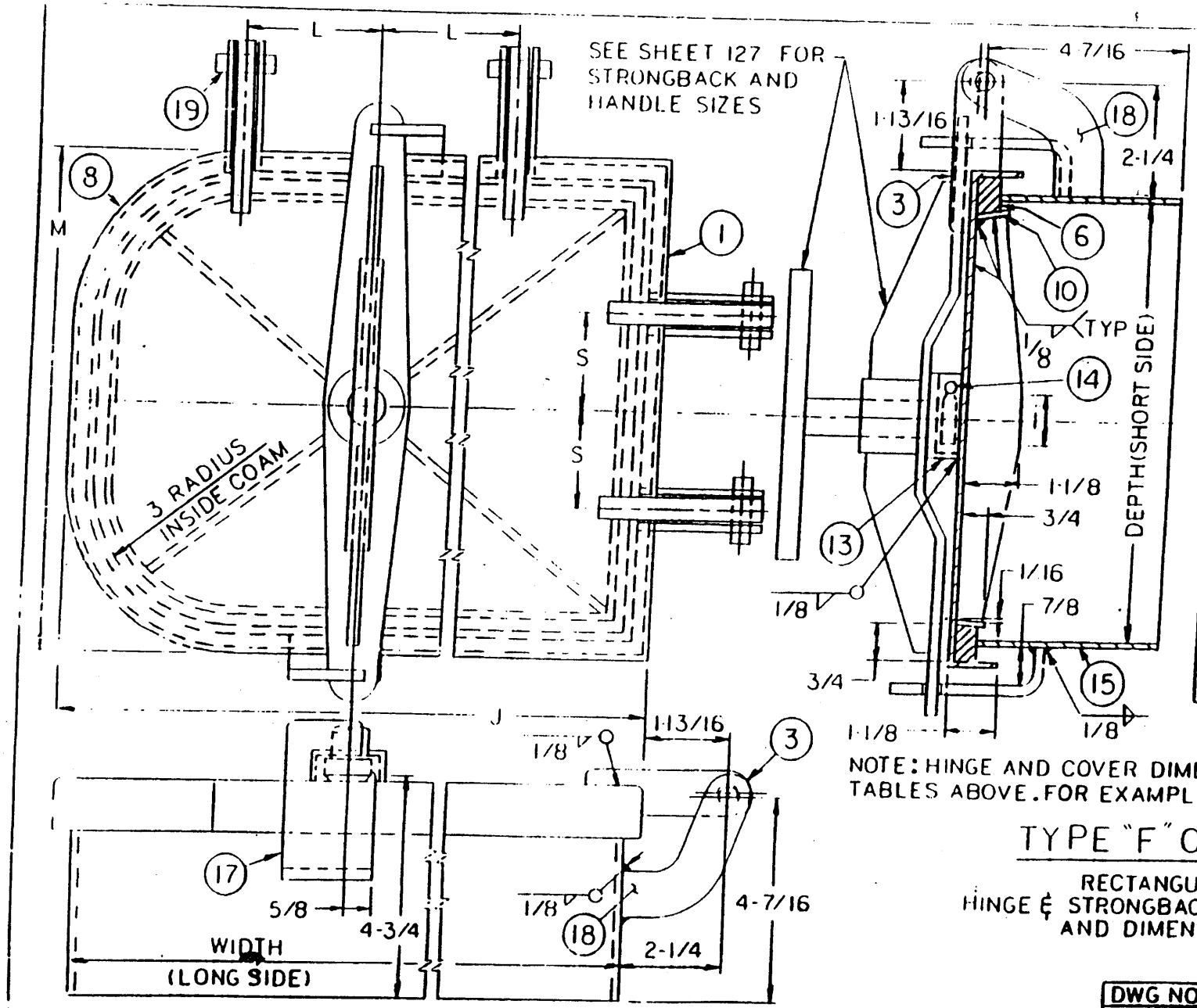

RECTANGULAR WIDTH			
WIDTH	J	L	W
10	11-1/8	2-1/2	SEE SH 129
11	12-1/8	3	
12	13-1/8	3-1/2	
13	14-1/8	3-1/2	-
14	15-1/8	4	-
15	16-1/8	4-1/2	-
16	17-1/8	5	-
18	19-1/8	6	-
21	22-1/8	7	-
* 24	25-1/8	8-1/2	5-1/2
* 27	28-1/8	9-1/2	6-1/2
* 30	31-1/8	10-1/2	7-1/2

RECTANGULAR DEPTH			
DEPTH	M	S	
6	7-1/8	-	
7	8-1/8	-	
8	9-1/8	-	
9	10-1/8	2	
10	11-1/8	2-1/2	
12	13-1/8	3-1/2	
14	15-1/8	4	
16	17-1/8	5-1/2	

* SEE SHEET 129 DET 7C

NOTE: HINGE AND COVER DIMENSIONS ARE SHOWN ON TABLES ABOVE. FOR EXAMPLE OF TABLE USE, SEE SH 129

TYPE "F" COVER

RECTANGULAR
HINGE & STRONGBACK ARRANGEMENT
AND DIMENSIONS

DETAIL 123

DWG NO 501-4870233 REV

STANDARD DETAILS SH 128 OF 140

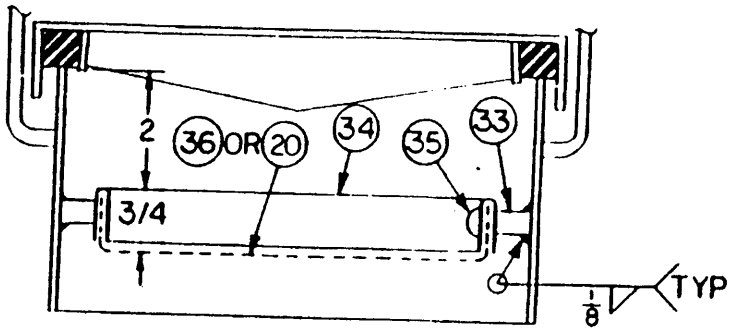

DETAIL 7A-INSTALLATION OF SCREEN (SEE NOTE 4)

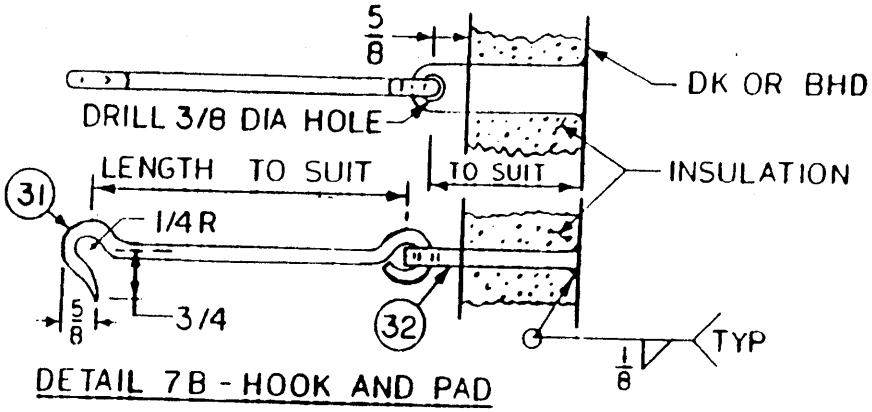

DETAIL 7B - HOOK AND PAD

TO DETERMINE HINGE AND COVER DIMENSIONS FROM TABLES ON SH 128-EXAMPLE: COVER NEEDED FOR 18 X 10 DUCT OPENING WITH 3 RADIUS CORNERS, HINGES LOCATED ON LONG SIDE. FROM "RECTANGULAR WIDTH" TABLE, 18 WIDTH SHOWS 19-1/8 COVER O.D.(J). HINGE LOCATION (L) IS 6 FROM "RECTANGULAR DEPTH" TABLE, 10 DEPTH SHOWS 11-1/8 COVER O.D. (M).

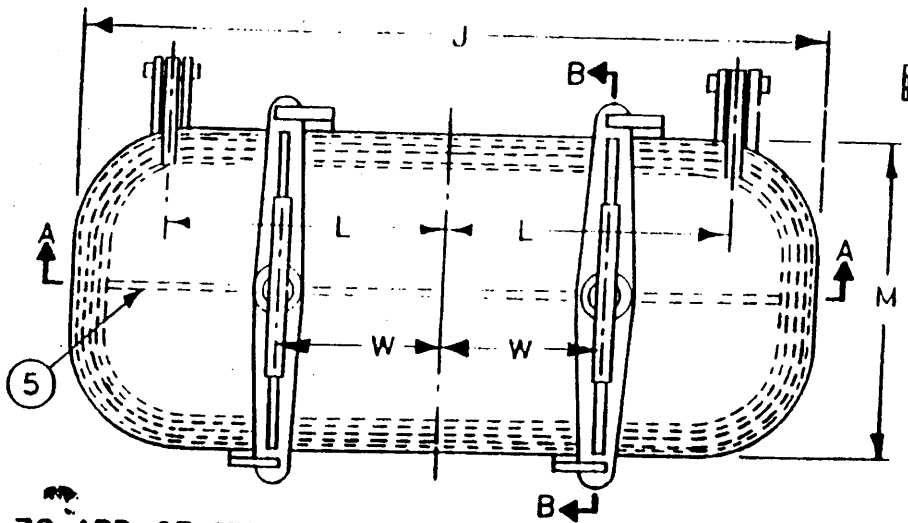

DETAIL 7C-ARR OF STRONGBACKS ON COVERS 24 WIDE & OVER

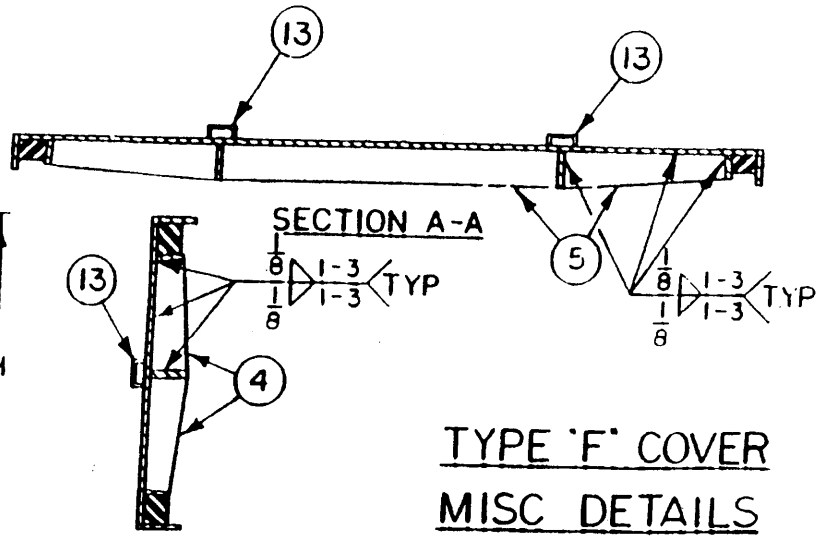

SECTION B-B

TYPE 'F' COVER

MISC DETAILS

DETAIL 124	
DWG NO 501-4870233	REV
STANDARD DETAILS	SH 129 OF 140

LIST OF MATERIAL

ITEM NO.	DESCRIPTION	MATERIAL	MATERIAL SPEC	STOCK NUMBER	REMARKS
1	MATERIAL FOR DUMMY, FILTER .063 THK	AL	QQ-A-250/8		
2	MATERIAL FOR FILTER HOUSING .123 THK	AL	QQ-A-250/8		
3	FLAT BAR, 1 X 1/8 THK	AL	QQ-A-200/8		
4	TEE BAR, 1-3/4 X 1-3/4 X 1/8 THK	AL	QQ-A-200/8		
5	TEE BAR, 2 X 3/4 X 1/8 THK	AL	QQ-A-200/8		
6	STUD, 1/4 DIA ROD, 1/4-20 THDS ONE END	AL	QQ-A-200/8		LENGTH TO SUIT HSG TYPE
7	STUD, 3/8 DIA ROD, 3/8-16 THDS ONE END	AL	QQ-A-200/8		LENGTH TO SUIT HSG TYPE
8	BOSS - 1/2 DIA ROD	AL	QQ-A-200/8		1/2 LONG
9	WING NUT, 1/4-20 NC2	BRASS	FF-N-845		
10	HEX NUT, 3/8-16 NC2	STEEL	MIL-S-1222		ZINC PLATED
11	HEX HD BOLT, 5/16-18 NC2	STEEL	MIL-S-1222		ZINC PLATED
12.	LOCK WASHER SPRING, FOR 5/16 BOLT	STEEL	FF-W-84		ZINC PLATED
13	LOCK WASHER SPRING, FOR 1/4 BOLT	STEEL	FF-W-84		ZINC PLATED
14	LOCK WASHER SPRING, FOR 3/8 BOLT	STEEL	FF-W-84		ZINC PLATED
15	SELF TAPPING SCREW, NO 10	STEEL	FF-S-107		ZINC PLATED
16	GASKET MATERIAL, 1/8 THK, MEDIUM SOFT	RUBBER	MIL-R-900		
17	ACOUSTIC INSULATION, NEOPRENE COATED	FBRS GL	-		1" THK ULTRALITE 300 OR EQL
18	PREFILTER (2 DEPTH, 80% EFFICIENCY)	VARIOUS	-		SEE NOTE 3, SH 131
19	ABSOLUTE FILTER (95% EFFICIENCY)	VARIOUS	-		SEE NOTE 2, SH 131
20	QUICK OPERATING INSPECTION PLATE	AL	QQ-A-250/8		

LIST OF MATERIAL FOR HIGH EFFICIENCY FILTER HOUSING

DETAIL 125

DWG NO. 501-4870233 REV

STANDARD DETAILS SHEET 130 OF 140

1. PREFILTER AND ABSOLUTE FILTERS, ITEMS 18 & 19, MEET REQUIREMENTS OF DCM FOR MEDICAL SPACES WHERE HIGH EFFICIENCY FILTRATION IS REQUIRED. A GREATER OR LESSER DEGREE OF AIR FILTRATION MAY BE SPECIFIED FOR OTHER SPACES ABOARD SHIP. SUITABLE FILTERS ARE TO BE SELECTED TO MEET THE REQUIREMENTS OF THE SPACE UNDER CONSIDERATION. SYSTEM DESIGNERS SHALL PROVIDE FILTER ORDERING INFORMATION ON THE VENTILATION ARRANGEMENT DRAWING SIMILAR TO NOTES 2 & 3 BELOW.

2. ABSOLUTE FILTERS SHALL BE EQUAL TO CAMBRIDGE FILTER CORP "MICRETAIN", SERIES 7-E, AND SHALL HAVE THE FOLLOWING SALIENT CHARACTERISTICS FILTRATION EFFICIENCY AT LEAST 90% ON .3 MICRON SMOKE, DOP TEST: FILTER MEDIUM SHALL HAVE ALUMINUM SEPARATORS INSTALLED IN A 16 GAGE GALVANIZED STEEL FRAME: A NEOPRENE GASKET SHALL BE CEMENTED TO THE AIR LEAVING SIDE OF THE FILTER FRAME.

3. PREFILTERS SHALL BE EQUAL TO AMERICAN AIR FILTER CO. TYPE '5700'. FILTER MEDIA SHALL BE FIBROUS GLASS. DEPTH OF FILTER SHALL NOT EXCEED 2 INCHES. THE FILTER FRAME SHALL BE RIGID AND OF ADEQUATE STRENGTH TO SUPPORT THE FILTER MEDIA WITHOUT THE USE OF ADDITIONAL METAL FRAMING.

4. SOME DIMENSIONAL DATA CONTAINED IN THIS SECTION MUST BE VERIFIED FROM ACTUAL FILTER SIZES. IT IS RECOMMENDED THAT SHOP HAVE FILTERS ON HAND BEFORE BEGINNING FABRICATION OF HOUSING.

5. STANDARD MATERIAL FOR FILTER HOUSINGS SHALL BE ALUMINUM. HOUSINGS MAY BE FABRICATED OF STEEL IF SHIPBOARD CONDITIONS DICTATE. THE FOLLOWING SPECIFICATIONS APPLY.

FLAT BAR	ASTM A569		
TEE BAR	MIL-S-22698	GALVANIZED SHEET STEEL	QQ-S-775
ROD			

6. MAXIMUM FACE VELOCITY FOR FILTERS (ITEMS 18 & 19) IS 625 FPM.

7. TO ENSURE A TIGHT GASKET SEAL, FILTER HOUSING BEARING SURFACE FOR GASKET OF ABSOLUTE FILTER SHALL BE FREE OF WARPS, WELDED JOINTS GROUND FLUSH AND WELDING SPLATTER REMOVED.

8. ABSOLUTE FILTER RETAINING NUT, ITEM 10, SHALL BE TORQUED TO 25 INCH POUNDS TO ASSURE SEALING ABSOLUTE FILTER GASKET TO FILTER HOUSING.

9. DUMMY FILTERS ARE TO BE USED IN LIEU OF ABSOLUTE FILTERS WHEN NO RADIATION HAZARD WORK IS BEING DONE. DUMMY FILTERS WILL BE ORDERED ON THE VENT SYSTEM DRAWING.

NOTES - HIGH EFFICIENCY FILTER HOUSING

DETAIL 126	
DWG NO. 501-4870233	REV
STANDARD DETAILS	SHEET 131 OF 140

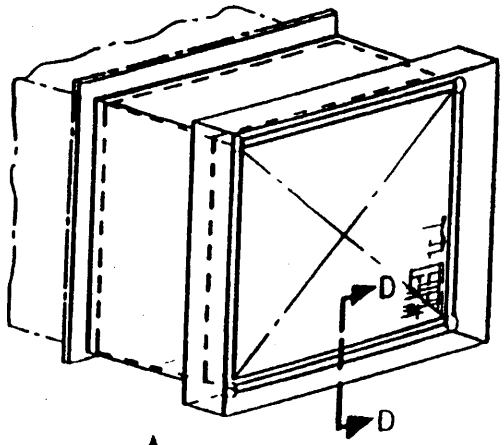

HOUSING TYPE "F"
END OF DUCT INSTL

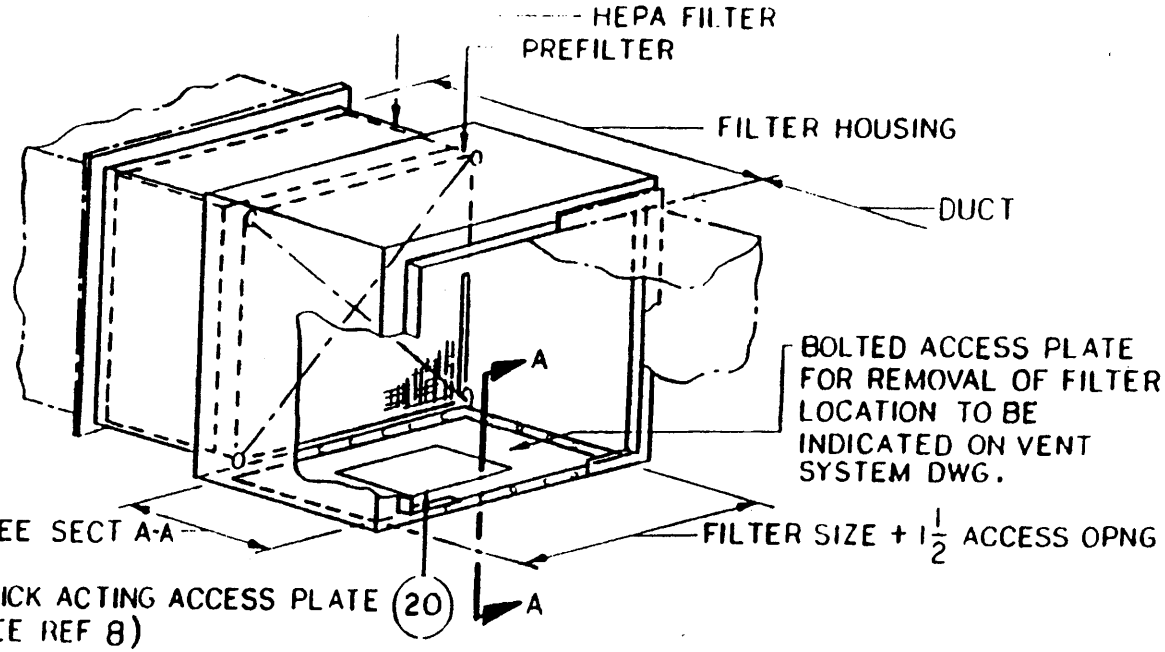

HOUSING TYPE "E"
RUN OF DUCT INSTL

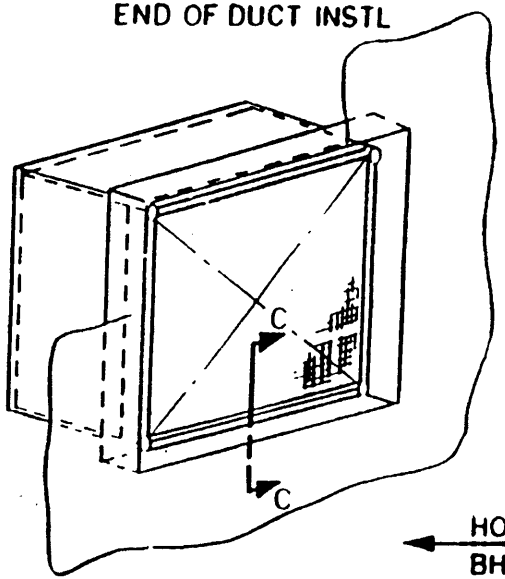

HOUSING TYPE "G"
BHD INSTALLATION

HIGH EFFICIENCY FILTER HOUSING TYPES

DETAIL 127	
DWG NO 501-4870233	REV
STANDARD DETAILS	SH 132 OF 140

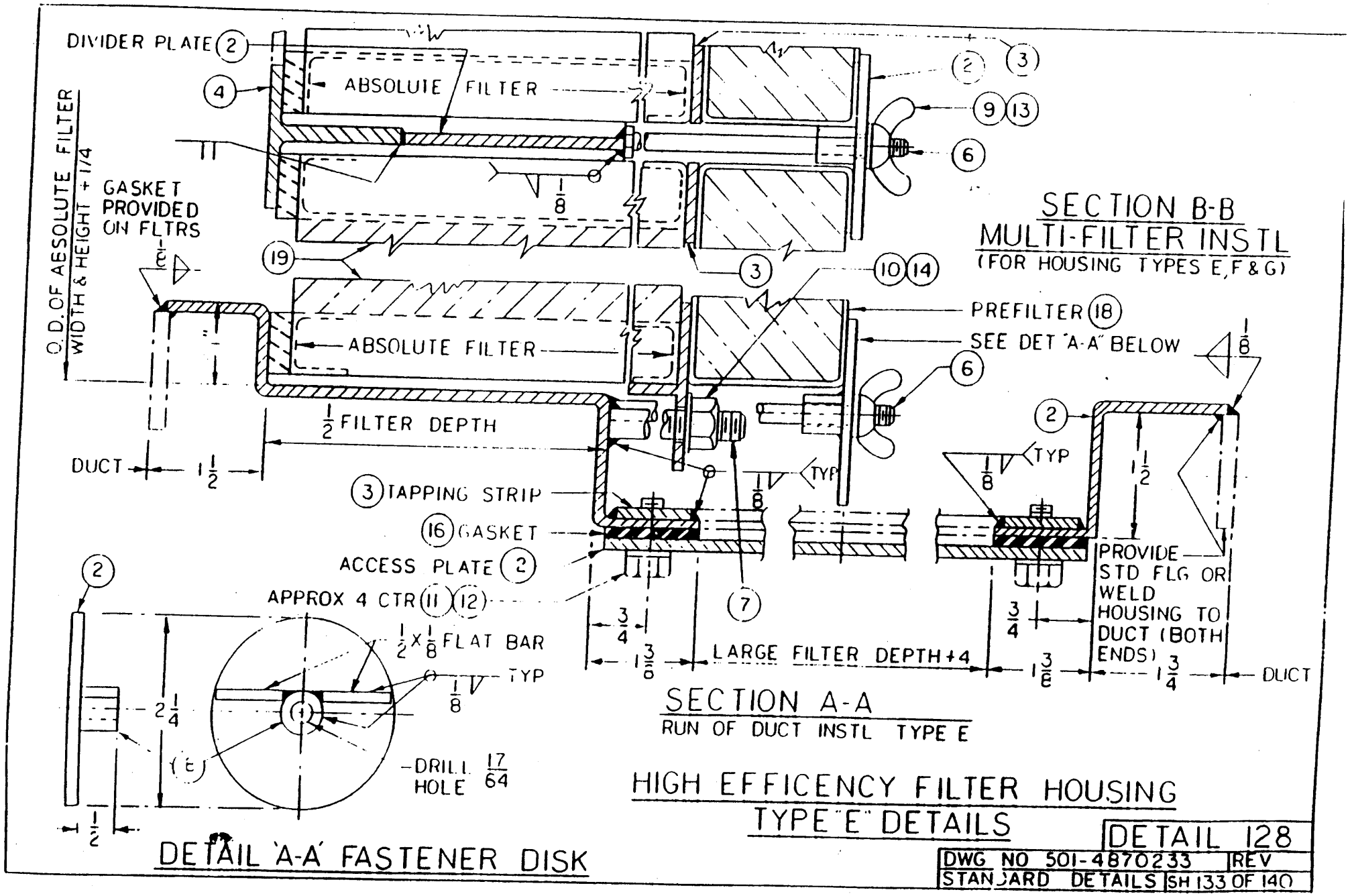
DIVIDER PLATE (2)
ABSOLUTE FILTER
O.D. OF ABSOLUTE FILTER WIDTH & HEIGHT + 1/4
GASKET PROVIDED ON FLTRS
1/8
(19)
(3)
(10)(14)
PREFILTER (18)
SEE DET "A-A" BELOW
(6)
(2)
(9)(13)
SECTION B-B
MULTI-FILTER INSTL
(FOR HOUSING TYPES E, F & G)
1/2 FILTER DEPTH
DUCT
1 1/2
(3) TAPPING STRIP
(16) GASKET
ACCESS PLATE (2)
APPROX 4 CTR (11)(12)
TYP
(7)
3/4
1 3/8
LARGE FILTER DEPTH + 4
PROVIDE STD FLG OR WELD HOUSING TO DUCT (BOTH ENDS)
1 3/4
DUCT
SECTION A-A
RUN OF DUCT INSTL TYPE E
1/2 X 1/8 FLAT BAR
2 1/4
DRILL 17/64 HOLE
DETAIL 'A-A' FASTENER DISK
HIGH EFFICENCY FILTER HOUSING
TYPE "E" DETAILS
DETAIL 128
DWG NO 501-4870233
REV
STANDARD DETAILS
SH 133 OF 140

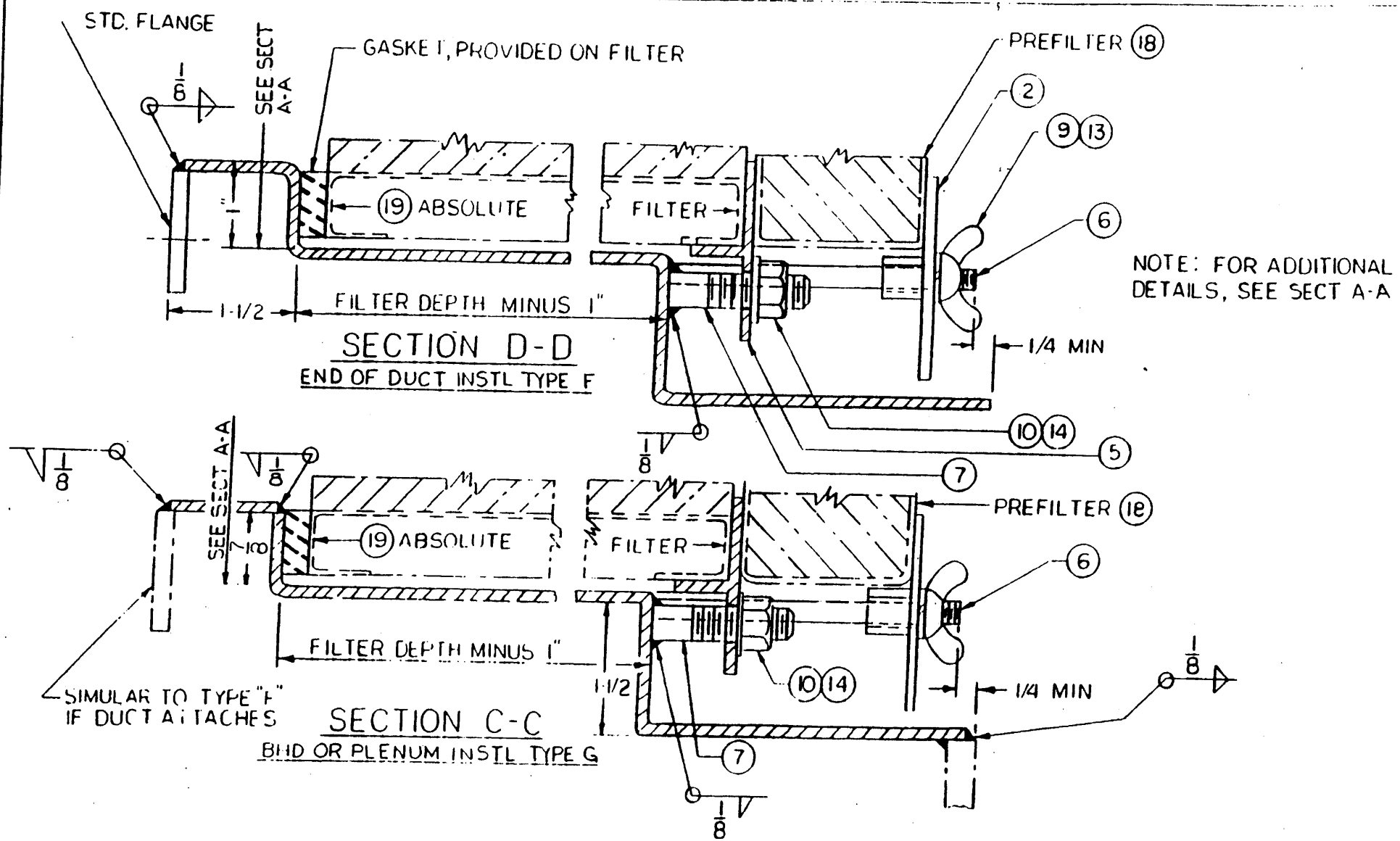

HIGH EFFICIENCY FILTER HOUSING TYPE "F" & "G" DETAILS

DETAIL 129	
DWG NO 501-4870233	REV
STANDAND DETAILS	SH 134 OF 140

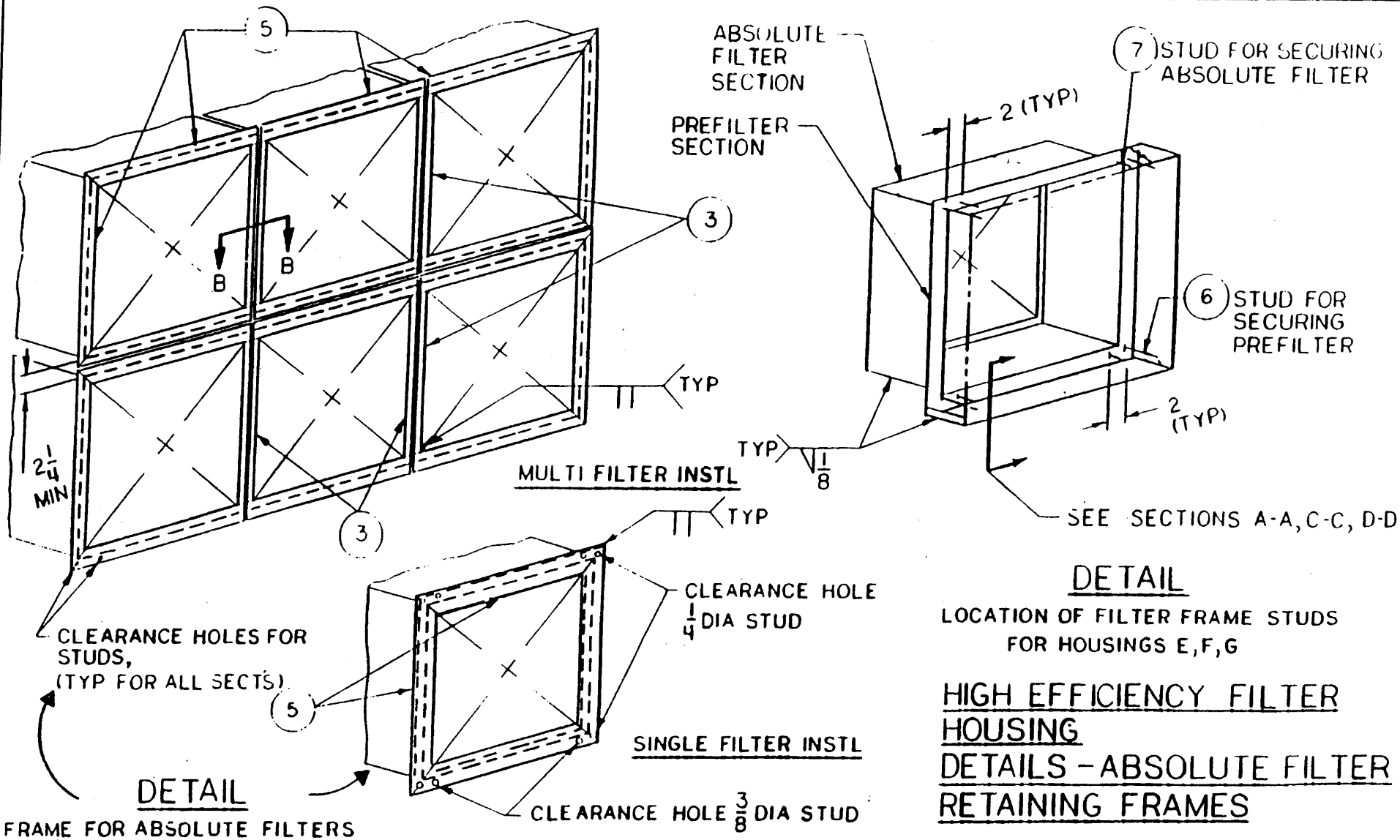

DETAIL

LOCATION OF FILTER FRAME STUDS FOR HOUSINGS E,F,G

DETAIL

FRAME FOR ABSOLUTE FILTERS FOR HOUSINGS E,F,G,

NOTE: PREFILTER SECTIONS OMITTED FOR CLARITY

HIGH EFFICIENCY FILTER HOUSING DETAILS - ABSOLUTE FILTER RETAINING FRAMES

DETAIL 130	
DWG NO 501-4870233	REV
STANDARD DETAILS	SH 135 OF 140

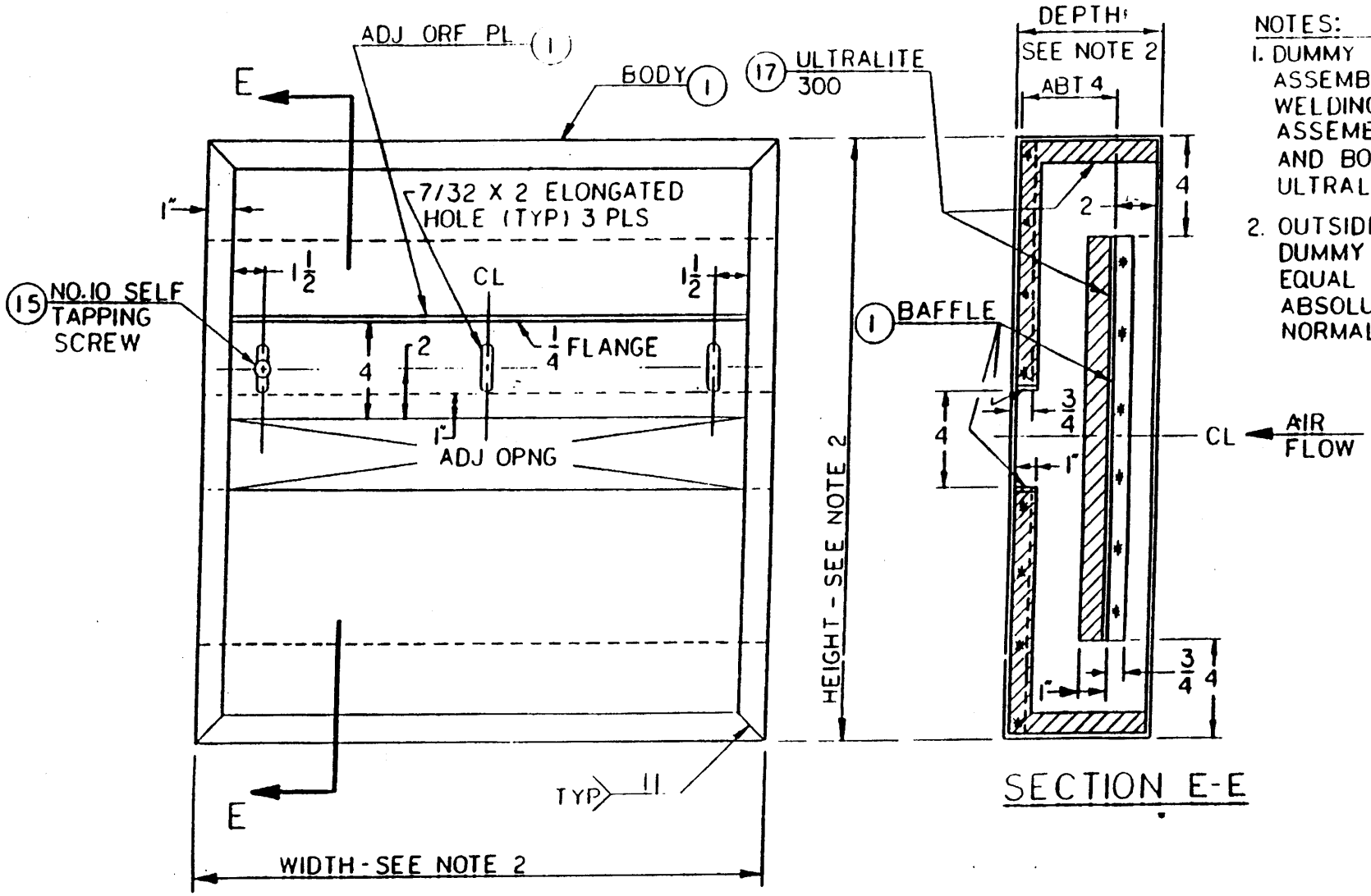

NOTES:

1. DUMMY FILTER TO BE ASSEMBLED BY SPOT WELDING AFTER ASSEMBLY, LINE BAFFLE AND BODY WITH ULTRALITE 300.
2. OUTSIDE DIMENSION OF DUMMY FILTER TO BE EQUAL TO THE ABSOLUTE FILTER NORMALLY IN PLACE.

HIGH EFFICIENCY FILTER HOUSING DUMMY FILTER

DETAIL 131	
DWG NO 501-4870233	REV
STANDARD DETAILS	SH 136 OF 140

LIST OF MATERIAL

PC NO.	DESCRIPTION	MATERIAL	MATERIAL SPEC	STOCK NUMBER	REMARKS
1.	FOUNDATION, BENT PLATE, 10.2 LB PL	OSS	MIL-S-22698		TYPE I, GR A, CL U
2.	FOUNDATION, CHOCK, 3 X 1/4 FB	OSS	ASTM - A36		
3.	FOUNDATION, BENT PLATE, 12.75 LB PL	OSS	MIL-S-22698		TYPE I, GR A, CL U
4.	FOUNDATION, CHOCK, 4 X 3/8 FB	OSS	ASTN - A36		
5.	PAD, 2 DIA X 1/4 THK	OSS	MIL-S-22698		TYPE I, GR A, CL U
6.	BOLT, HEX HD, 5/8-11UNC-2A, 1-1/2 LG	STL ZN PLD	MIL-S-1222		TYPE 2, GR 5
7.	NUT, HEX, 5/8-11UNC-3B	STL ZN PLD	MIL-N-25027		MS 17829, SELF LOCKING
8.	HEADER, 4 X 1/4 FB	OSS	ASTM - A36		
9.	HEADER, 5 X 3/8 FB	OSS	ASTM - A36		
10.	FILLER PLATE, 10.2 LB PL	OSS	MIL-S-22698		TYPE I, GR A, CL U
11.	FILLER PLATE, 12.75 LB PL	OSS	MIL-S-22698		TYPE I, GR A, CL U

FOUNDATIONS STEEL STRUCT
HORIZ FAN COIL UNITS

DETAIL 132

DWG NO. 501-4870233 REV

STANDARD DETAILS

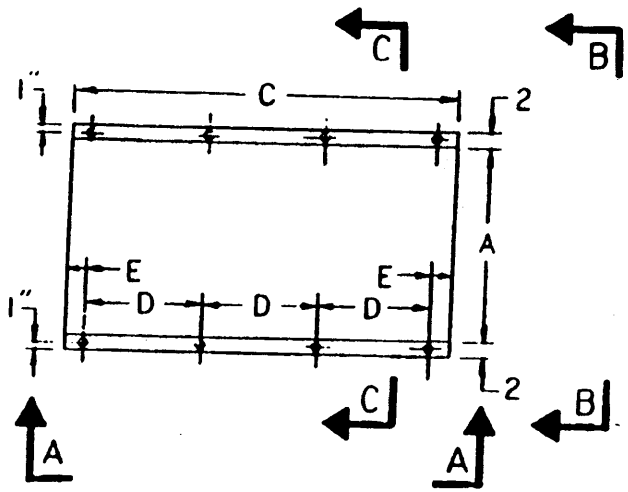

PLAN VIEW
OF UNIT

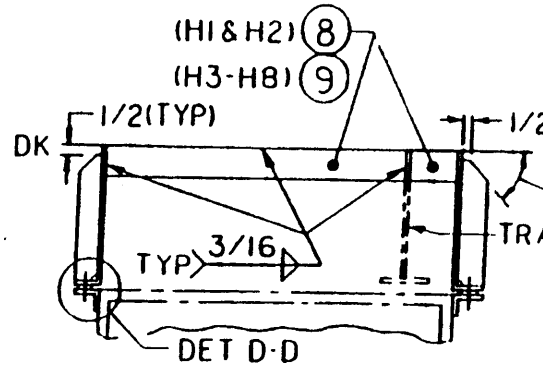

SECTION C-C

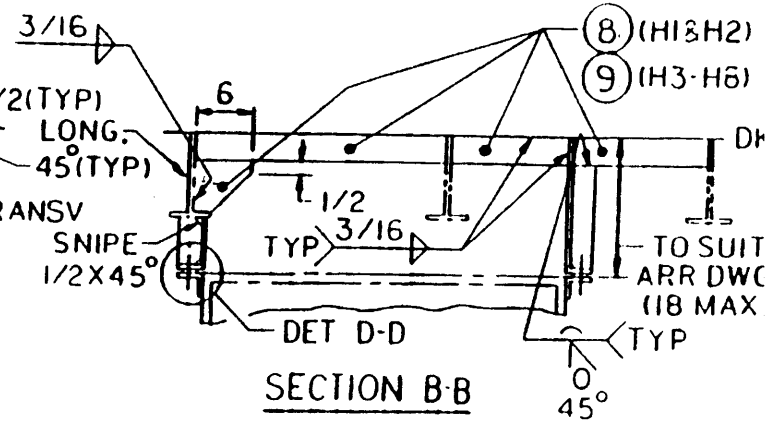

SECTION B-B

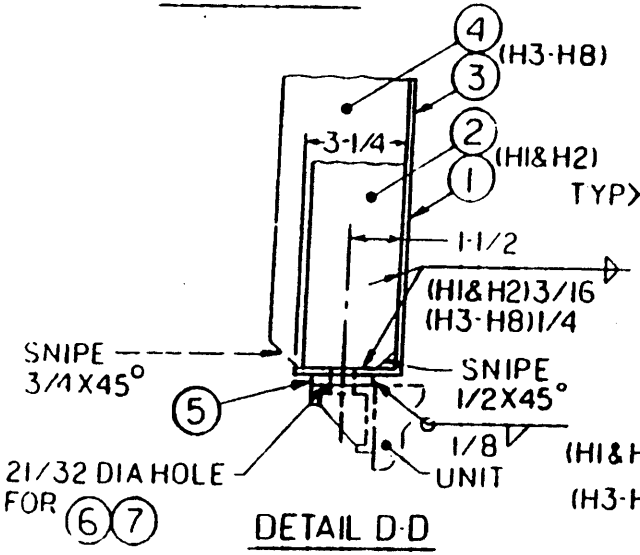

DETAIL D-D
(TYP 8 PLACES)

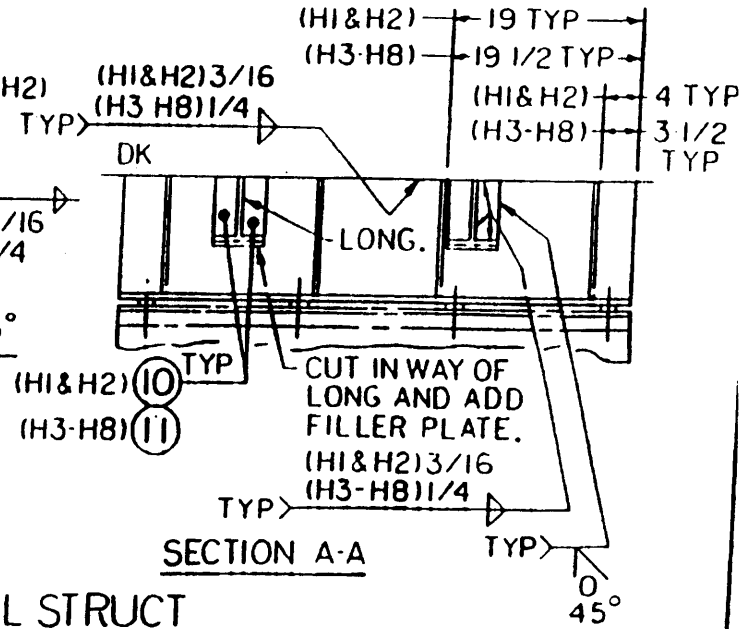

SECTION A-A

PHYSICAL DATA-MARLO FAN COIL UNIT						
COIL SIZE	DIMENSIONS (INCHES)					UNIT WT
	A	DEPTH	C	D	E	
H1	25	10	50	15	2-1/2	275
H2	25	10	50	15	2-1/2	285
H3	27	14	52	16	2	350
H4	36	14	52	16	2	420
H5	44	14	52	16	2	500
H6	39	17	52	16	2	500
H7	52	17	52	16	2	660
H8	62	17	52	16	2	780

FOUNDATIONS STEEL STRUCT
HORIZ FAN COIL UNITS

DETAIL 133

DWG NO 501-4870233	REV
STANDARD DETAILS	SH 138 OF 140

LIST OF MATERIAL

PC NO.	DESCRIPTION	MATERIAL	MATERIAL SPEC	STOCK NUMBER	REMARKS
1.	FOUNDATION, BENT PLATE, 0.250 THK	AL	ASTM B209		ALLOY 5456, H116
2.	FOUNDATION, CHOCK, 3 X 1/4 FB	AL	QQ-A-200/5		ALLOT 5086, H111
3.	FOUNDATION, BENT PLATE, 0.3125 THK	AL	ASTM B209		ALLOY 5456, H116
4.	FOUNDATION, CHOCK, 4 X 3/8 FB	AL	QQ-A-200/5		ALLOY 5086, H111
5.	PAD, 2 DIA X 0.250 THK	AL	ASTM B209		ALLOY 5456, H116
6.	BOLT, HEX HD, 5/8-11UNC-2A, 1-1/2 LG	STL ZN PLD	MIL-S-1222		TYPE 2, GR 5
7.	NUT, HEX, 5/8-11UNC-3B	STL ZN PLD	MIL-N-25027		MS 17829, SELF-LOCKING
8.	WASHER, FLAT RGLR, 5/8	STL ZN PLD	FF-W-92		TYPE A, GR 1, CL A
9.	HEADER, 3 X 3/8 FB	AL	QQ-A-200/5		ALLOY 5086, H111
10.	HEADER, 4 X 1/2 FB	AL	QQ-A-200/5		ALLOY 5086, H111
11.	FILLER PLATE, 0.250 THK	AL	ASTM B209		ALLOY 5456, H116
12.	FILLER PLATE, 0.3125 THK	AL	ASTM B209		ALLOY 5456, H116

FOUNDATIONS AL STRUCT
HORIZ FAN COIL UNITS

DETAIL 134

DWG NO. 501-4870233 REV

STANDARD DETAILS

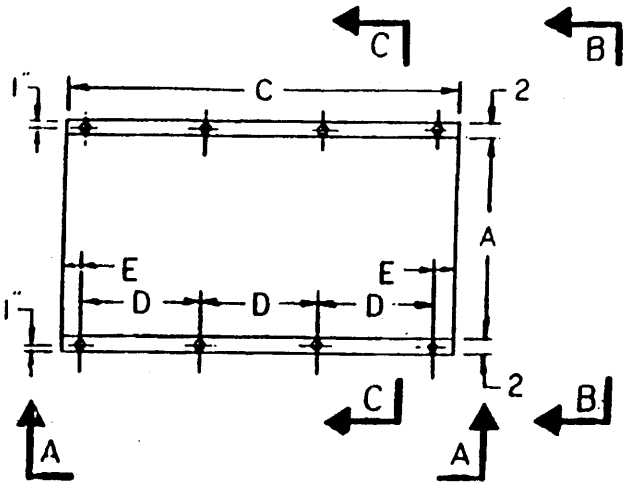

PLAN VIEW
OF UNIT

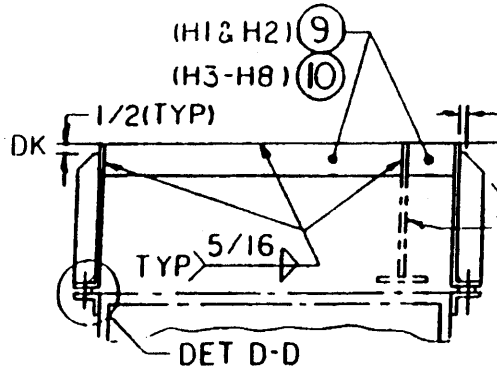

SECTION C-C

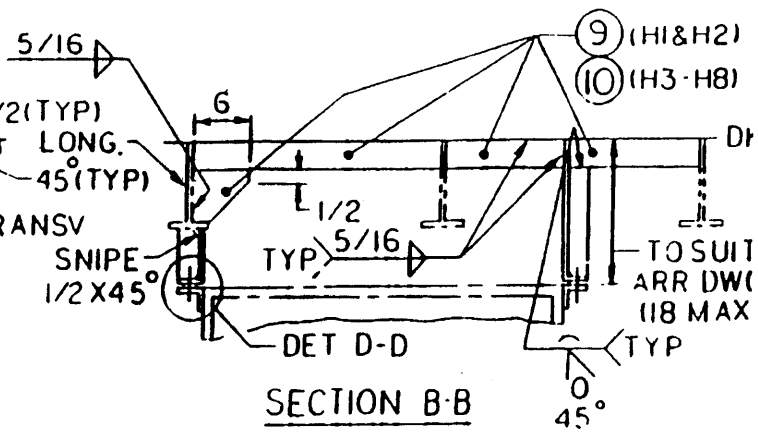

SECTION B-B

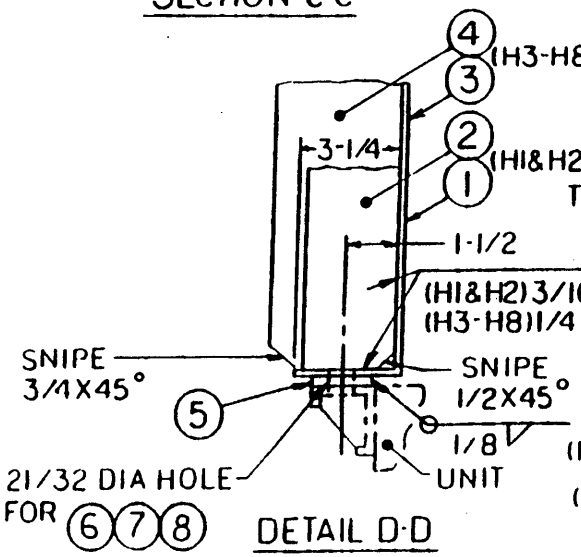

DETAIL D-D
(TYP 8 PLACES)

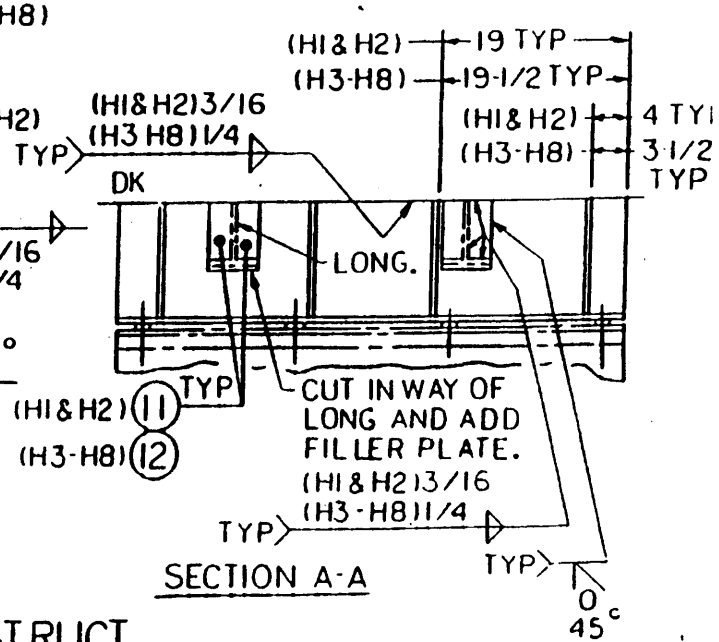

SECTION A-A

PHYSICAL DATA-MARLO FAN COIL UNIT						
COIL SIZE	DIMENSIONS (INCHES)					UNIT WT
	A	DEPTH	C	D	E	
H1	25	10	50	15	2-1/2	275
H2	25	10	50	15	2-1/2	285
H3	27	14	52	16	2	350
H4	36	14	52	16	2	420
H5	44	14	52	16	2	500
H6	39	17	52	16	2	500
H7	52	17	52	16	2	660
H8	62	17**	52	16	2	780

FOUNDATIONS AL STRUCT
HORIZ FAN COIL UNITS

DETAIL 135

DWG :0 501-4870233 REV

STANDARD DETAILS SH 140 OF 143

LIST OF MATERIAL				
PC NO	DESCRIPTION	MAT'L	SPEC	REMARKS
1	ACC COVER, 6" X 6"	ZN PL STL	QQ-S-775	.079 THK
2	HINGE, PIANO	STL	COML	
3	LATCH, ASSY	VARIOUS	COML	
4	GASKET	RUBBER	ASTM 1056	5/32" SPONGE RBR
5	POP RIVETS, 3/16" DIA	CRES	COML	LENGTH TO SUIT
6	ADHESIVE		MMM-A-121	1/2 PINT CAN

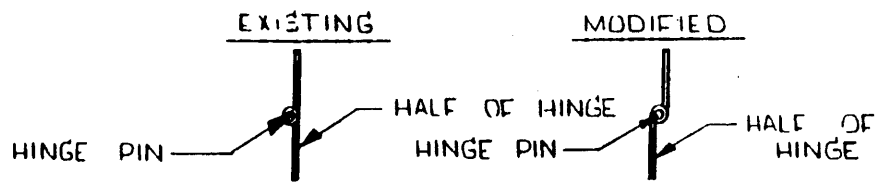

HINGE DETAIL

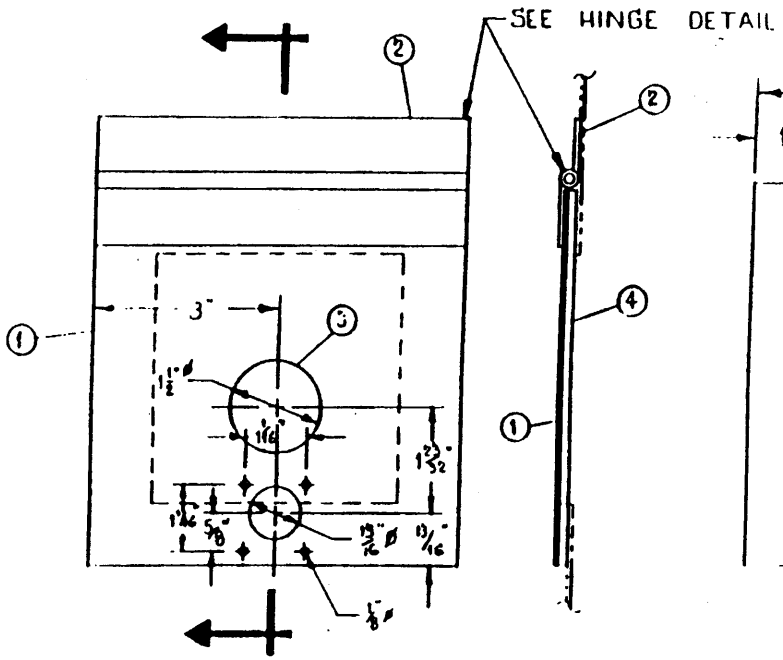

ACCESS PLATE DETAIL ASSY

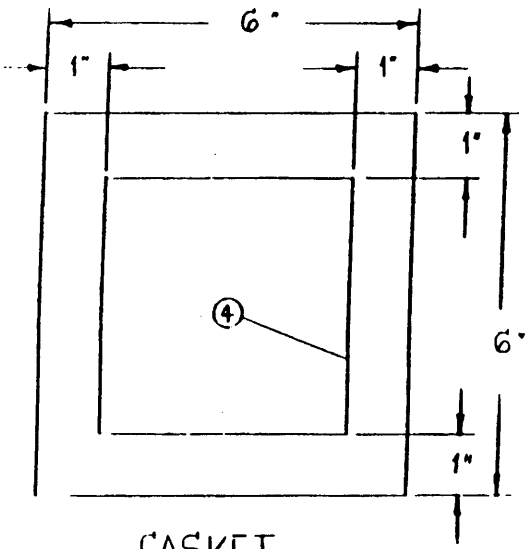

GASKET

SCALE : 1/2" = 1'-0"

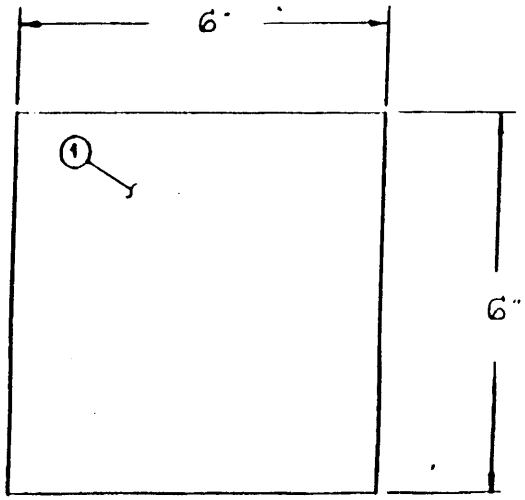

ACCESS COVER

SCALE : 1/2" = 1'-0"

DETAIL 136	
DWG NO. 501-4870233	REV D
STANDARD DETAILS	SH 141 OF 143

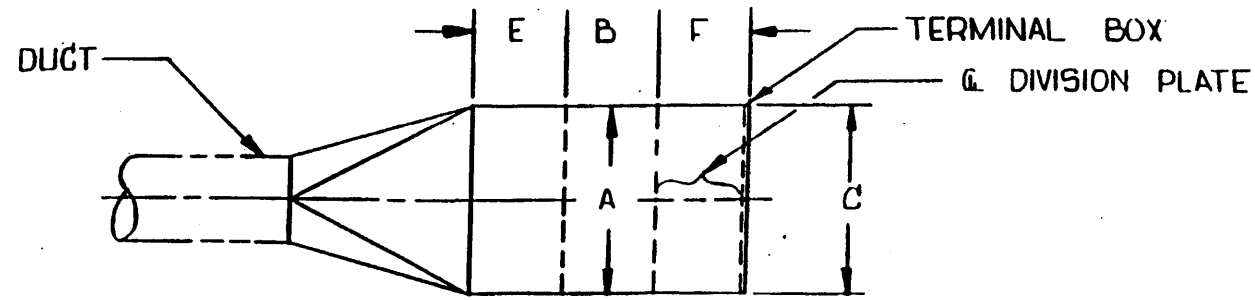

PLAN VIEW

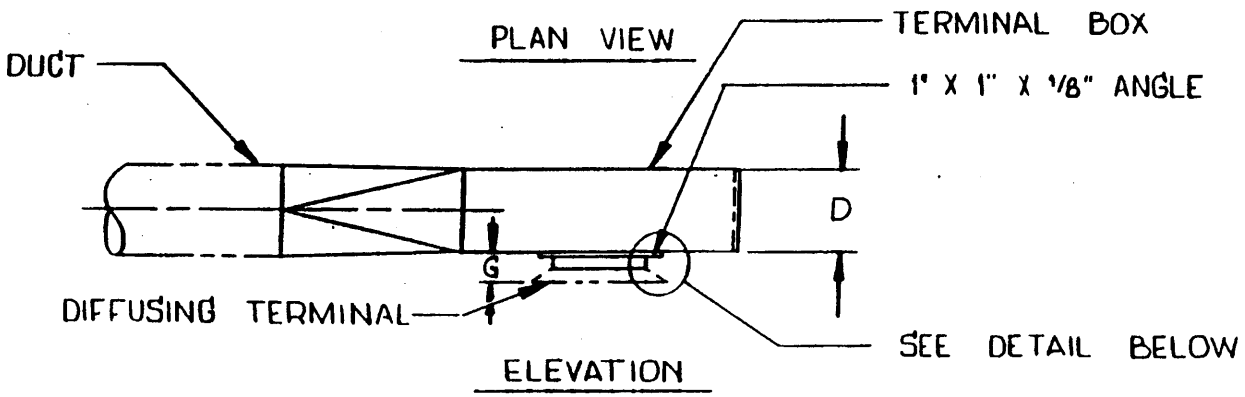

ELEVATION

DIFFUSER				TERM BOX				CFM	
A	B	G RC	G RV	C	D	E	F	MIN	MAX
6	6	2 3/8	1 3/4	6	5	6	6	75	150
6	9			6	5			155	225
9	6			9	5			155	225
6	12			6	5			230	300
12	6			12	5			230	300
9	9			9	6			230	300
9	12			9	6			308	410
12	9			12	6			308	410
12	12			12	7			415	460
12	15			12	7			465	620
15	12			15	7			465	620
15	15			15	8			625	750
18	18	↑	↑	18	8	↑	↑	755	1150

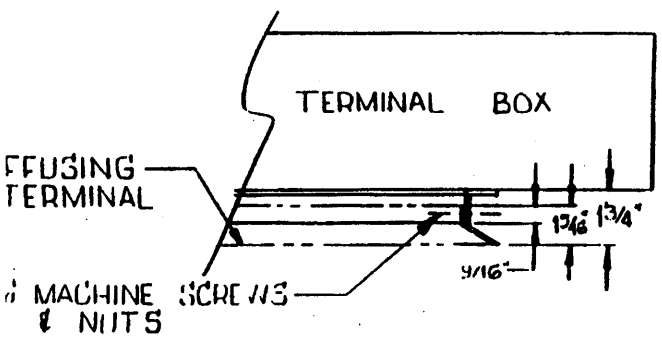

TYPE "RV"

(WITHOUT CEILING)

DETAIL

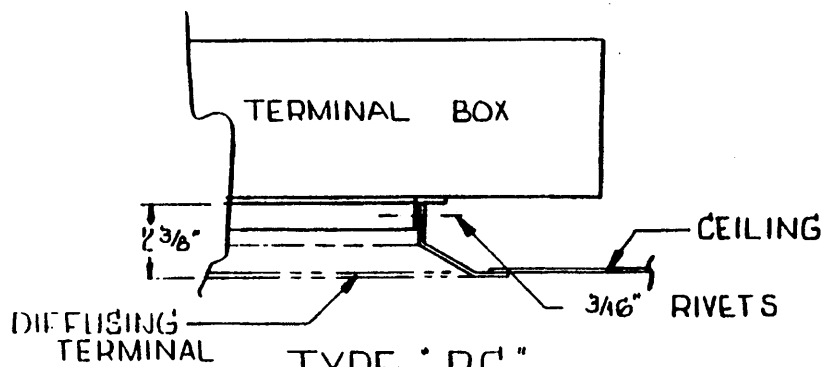

TYPE "RC"

(WITH CEILING)

DETAIL

DETAIL 137

DWG NO. 501-4870233	REV D
STANDARD DETAILS	SH 142 OF 143

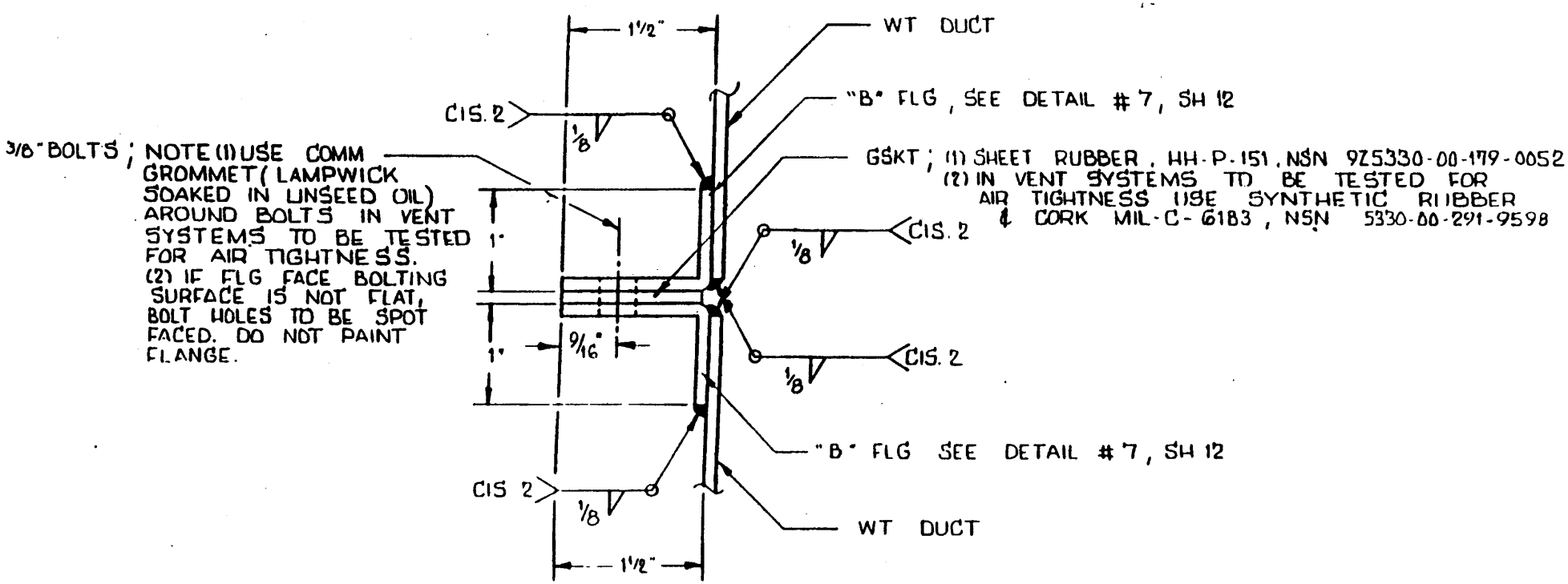

ALTERNATE DETAIL FOR FLANGED JOINTS IN WT DUCT USING ANGLE

DETAIL 136	
DWG NO 501-[illegible]	REV D
STANDARD DETAILS	SH 143 OF 143