4721371_53711_-_ B_0001_0001_G_N
December 6, 2000 12:32 AM

REV STATUS OF SHEETS	REV																																
	SHEET	1	2	3	4	5	6	7	8	9	10	11	12	13	14	15	16	17	18	19	20	21	22	23	24	25	26	27	28	29	30	31	32
REV																																	
SHEET	33	34	35	36	37	38	39	40	41																								
REV																																	
SHEET																																	

LIST OF MATERIAL — QUANTITIES FOR —

PIECE NO.	NAME	NO. REQD	MATERIAL	MT'L SPEC	REMARKS	SHOP ROUTING

PRINTS ISSUED

NO.	REVISION DESCRIPTION	DATE	APPVD.
	SEE SHEET NO. 2		

USS FORRESTAL (CV 59)
NAME OF VESSEL
T-1 3 T-2 9
IF NOT SUITABLE T-3 12
EXTERNAL DISTRIBUTION

NO. OF APPL. SHIPS	SHIPALT & JOB ORDER NUMBER	DATE	APPD.

CONTRACT NO. N00189-77D-0344
CDI MARINE CO.
JACKSONVILLE, FLORIDA

NORFOLK NAVAL SHIPYARD
PORTSMOUTH, VIRGINIA

SCALE NONE = 1 FT.
DRAWN BY M. LOWE DATE
TRACED BY
CHECKED BY J·A·HORTON
BRANCH SUPVR.
ASST. CHIEF DESIGN ENGR. 11-15-79 (ISSUED BY)
ABBREV. TITLE NNSY LABEL PL STD

NNSY
LABEL PLATE STANDARDS

	DRAWING NUMBER			REV.	SHEET 1 OF 41
B	STD	605	4721371	B	1 of 41

REV	SHIPALT NUMBER	WEIGHT GROUP	WEIGHT	R OR A	V.C.G. REF. B.L. (3 DEC.)	L.C.G. REF. M.P. (3 DEC.)	F OR A	T.C.G. REF. C.L. (3 DEC.)	P OR S	SUBSAFE	CATEGORY

WEIGHT DATA
WEIGHT TO NEAREST POUND. LEVERS IN FEET
USE SEPERATE LINES FOR EACH WT. GRP. SHIPALT, REV., WT. ADDED, WT. REMOVED
* NUCLEAR SUBS ONLY (SEE NAVSHIPS 0902-002-3000 PART 1 1 1)
I=INSTALL R=REMOVE F=FWD. A=AFT P=PORT S=STBD 0=1 X=LOAD ITEM

FOUO

4721371 SH 1

4721371_53711_-_B_0002_0001_G_N
December 6, 2000 12:35 AM

REVISIONS

REV	IDENT. SH NO	IDENT. LINE NO	DESCRIPTION	CONTRACTOR DATE	CONTRACTOR CHKR	CONTRACTOR APPD	USN DATE	USN APPD
A[34]	3[1]	—	1) ADDED REF TO SHEETS 28A & 33A					
	4[6]	—	DELETED NOTES 1.5, 1.10 & 1.11.					
			ALTERED NOTES 1.3, 1.6 & 1.9.					
	5[12]	—	DELETED NOTES 1.14 & 1.18.					
			ALTERED NOTES 1.13, 1.15, 1.16, 1.19 & 1.20.					
			ADDED NOTES 1.23 THRU 1.27.					
	7[1]	—	ALTERED NOTE 3.1.					
	8[2]	—	DELETED REF TO NOTE 1.18.					
			DELETED DUPLICATE REF TO VENT CLOSURE.					
	9[3]	—	DELETED REF TO NOTE 1.18.					
			ALTERED NOTE 2.					
			ADDED REF TO LIFTING PAD PLATES					
	28[3]	—	ADDED PLATE PIECE NOS.					
	28A[1]	—	ADDED SHEET					
	32[3]	—	DELETED NOTES 2 & 3.					
			ADDED NOTE 5.				9/1/00	
	33[1]	—	ADDED REF TO SHEETS 33A, 13 & 35.					
	33A[1]	—	ADDED SHEET. KOC					
B[9]	3[1]		1) ADDED SHT. 39A TO TABLE OF CONTENTS					
	5[1]		MODIFIED NOTE 1.24(C)					
	38[3]		MODIFIED NOTES 1 & 5, AND LABEL PLATE AND STRAP ASSY "DETAIL				11/1/05	
	39[2]		MODIFIED NOTE 1 & LOWER DETAIL					
	39A[1]		ADDED SHEET 39A					
	41[1]		MODIFIED NOTE 1. RMK 10-31-07					

LABEL PLATE STANDARDS	HULL NO.	DRAWING NO.	SH NO.	REV
REVISIONS	STD.	605-4721371	2	B

4721371 SH2

TABLE OF CONTENTS

SUBJECT	SHEET NO.
TITLE SHEET	1
REVISIONS	2
TABLE OF CONTENTS	3
GENERAL NOTES	4-7
INSTRUCTIONS FOR MATERIAL AND TYPES OF LABEL PLATES TO BE USED	8&9
FASTENINGS	10
METAL PHOTO LETTER SIZES	11
LETTER LIMITATIONS	12
RECTANGULAR PLATE UNIFORM LETTERING	13
RECTANGULAR PLATE 1/4" & 1/8" LETTERING	14
RECTANGULAR PLATE 3/8" & 1/4" LETTERING	15
RECTANGULAR PLATE 1/2" & 1/4" LETTERING	16
ENGRAVED COVER	17
LABEL PLATE FASTENERS	18
CLOSURE TYPE-SQUARE-7/8" CIRCLED	19
CLOSURE TYPE-SQUARE-1" LETTER	20
CLOSURE TYPE-SQUARE-1-1/2" LETTERS-DARKENED SHIP	21
CLOSURE TYPE-SQUARE-2" LETTER	22
CLOSURE TYPE-SQUARE-3" LETTER	23
CLOSURE TYPE-SQUARE-2" LETTERS "X" & "W" CIRCLED	24
CLOSURE TYPE-SQUARE-2" LETTER-"Y" CIRCLED	25
CLOSURE TYPE-SQUARE-2" LETTER-"Z" CIRCLED	26
COMPARTMENT LABEL PLATES	27
WORKING LOAD & TROLLEY TRACK	28
LABELING BIMETALLIC THERMOMETER	29
LABEL WIRED TO PIPE	30
SPECIAL LABEL PLATES	31
WARNING, SAFETY & CAUTION LABEL PLATES	32
STD DISC TYPE LABEL PLATES FOR VALVES	33
DIE SIZES	34
RECT PLATE FOR DC VALVES-LONG INSCRIPTIONS	35
ROUND PLATE-FOR VALVE OPERATING GEAR	36
ENGRAVED HANDWHEELS	37
STRAPS & BACKING PLATES	38
STRAPS & BACKING PLATES	39
BACKING PLATES FOR RIVETING OR TACK WELDING	40
BACKING PLATES FOR RIVETING OR TACK WELDING	41
LIFTING PAD LABEL PLATE	28A
(A) TABLE FOR SELECTION OF LABEL SIZE FOR USE ON VALVE HANDWHEELS	33A
(B) SQUARE LABEL DETAILS	38A

LABEL PLATE STANDARDS	HULL NO.	DRAWING NO.	SH. NO.	REV
TABLE OF CONTENTS	STD	605-4721371	3	B

GENERAL NOTES FOR SELECTION AND TYPE OF LABEL PLATES

1.1 THESE STANDARDS ARE FILED IN THE NNSY PLAN FILES, CODE 202.21. ALTERATIONS ARE TO BE MADE BY THE DESIGN DIVISION ONLY.

1.2 ALL LABEL PLATES SHALL CONFORM TO, AND BE LOCATED IN ACCORDANCE WITH, THE FOLLOWING AS APPLICABLE:

(A) GENERAL SPECIFICATIONS; SECT. 305, 507, AND 602.

(B) MILITARY SPECIFICATIONS MIL-P-15024 AS MODIFIED HEREIN.

1.3 LABEL PLATES ARE TO BE MADE OF CORROSION RESISTING STEEL (CRES), ANODIZED PHOTO SENSITIZED ALUMINUM, ALUMINUM, OR LAMINATED THEROMSETTING PLASTIC AS FOLLOWS:

(A) CORROSION RESISTING STEEL (CRES)

(1) ENGRAVED CRES (QQ-S-766, CLASS 304, FINISH 4); LABEL PLATES ARE TO BE .05 THICK.

(2) DIE-STAMPED CRES (QQ-S-766, CLASS 304; FINISH 4); LABEL PLATES ARE TO BE .03" THICK.

A1 (B) ALUMINUM

(1) PHOTO PROCESS LABEL PLATES WILL BE FABRICATED BY A METAL PHOTO PROCESS USING ANODIZED PHOTO SENSITIZED ALUMINUM (SEN AL) SHEET. ~~THICKNESS OF SHEETS ON STOCK ARE .020", .040" AND .080" AND MATERIAL IS STOCKED IN 12" X 18" SHEETS~~. GENERALLY, FLAT RECTANGLE LABELS SHALL BE .020" THICK, AND VALVE STEM DISC TYPE LABELS SHALL BE .032 THICK.

(2) ENGRAVED ALUMINUM (QQ-A-250/8b, H-32 TEMPER); LABEL PLATES ARE TO BE .05" THICK.

(C) LAMINATED PLASTIC (FED. L-P-387a), TY NDP); LABEL PLATES ARE TO BE NOT LESS THAN 1/16" THICK. THE THREE LAMINATIONS SHALL BE OF TWO COLORS (TO BE SPECIFIED ON THE LABEL PLATE LIST).

1.4 WHENEVER POSSIBLE LABEL PLATES ARE TO BE MADE BY THE METAL PHOTO PROCESS USING BLACK TYPE ON ANODIZED PHOTOSENSITIZED ALUMINUM. (SEE NOTES 1.19, 1.20, 1.21 and 1.22 1.9)

A1 ~~1.5 VALVES ORDERED, BE LABELED IN THE FOLLOWING ORDER OF PREFERENCE:~~
~~(A) INSCRIPTION ON RING OF HANDWHEEL, WHERE PRACTICAL (NOTE 3.7)~~
~~(B) INSCRIPTION ON CIRCULAR DISC AND SECURED IN PLACE BY THE HANDWHEEL NUT.~~
~~(SEE NOTE 3.8).~~
~~(C) INSCRIPTION ON A SQUARE PLATE ATTACHED TO A BRACKET PLATE WITH MODIFIED RING (SEE NOTE 3.9 & 3.9)~~
~~(D) INSCRIPTION ON A FLAT RECTANGULAR PLATE CURVED TO FIT THE PIPING (OUTSIDE OF LAGGING, IF APPL) AND WELDED IN PLACE ON THE PIPE ADJACENT TO THE VALVE OR SECURED TO ADJACENT PIPE STRUCTURE (NOTE 3.9)~~

A1 1.6 IF THE VALVE TO BE LABELED IS LOCATED IN THE WEATHER, AND HAS EITHER A BRASS OR BRONZE STEM, HANDWHEEL OR HANDWHEEL NUT, THE LABEL PLATE MATERIAL SHALL BE CRES. ~~WHEN THE PIPE LABELS ARE USED.~~

1.7 WHERE VALVES ARE IN TANKS, VOIDS OR OTHER NORMALLY UNMANNED SPACES, THE LABEL SHALL BE LOCATED AT THE REMOTE OPERATING STATION. WHERE THEY ARE BOTH LOCALLY AND REMOTELY CONTROLLED, THEY SHALL BE LABELED AT BOTH PLACES.

1.8 WHEN A VALVE IS INSTALLED BELOW A FLOOR PLATE, ABOVE CEILING OR SIMILARLY HIDDEN, A LABEL SHALL BE INSTALLED BOTH ON THE VALVE AND ON THE PORTABLE ACCESS PLATE AND/OR CEILING GRID WORK (SEE NOTE 3.13.)

A1 1.9 WHERE SPECIFICALLY REQUIRED BY THE GENERAL SPECIFICATIONS IN SECTIONS 305, 507 OR 602, METAL PHOTO LABEL PLATES LOCATED IN SPACES WITH LOW LEVEL RED ILLUMINATION (RED LIGHT AREAS) SHALL HAVE NATURAL LETTERS ON A BLACK BACKGROUND. SECTION 332 OF THE GENERAL SPECIFICATIONS WILL SPECIFY THE SPACES AND AREAS TO BE EQUIPPED WITH LOW LEVEL RED ILLUMINATION. THIS NOTE (1.9) SHALL BE REFERENCED IN THE APPLICABLE ORDERING DATA.

A1 ~~1.10 THE LENGTH OF EACH LABEL CHAIN, WITH THE EXCEPTION OF VALVE LABELS PLATED, SHALL BE NAME TO SUIT THE INSCRIPTION, UNLESS OTHERWISE NOTED IN THE APPLICABLE ORDERING DATA.~~

A1 ~~1.11 THE LENGTH OF EACH LABEL CHAIN, WITH THE EXCEPTION OF VALVE LABELS PLATED, SHALL BE NAME TO SUIT THE INSCRIPTION, UNLESS OTHERWISE NOTED IN THE APPLICABLE ORDERING DATA. FOR ALL ELECTRICAL EQUIPMENT, THE [illegible] ARE PROVIDED [illegible] ELECTRICAL EQUIP. [illegible] THE PLATFORM [illegible] THE MEANS [illegible] THE NAME PLATES.~~

1.12 ENCLOSURES OF WATERTIGHT BOXES ARE NOT TO BE PENETRATED BY MACHINE SCREWS USED IN ATTACHING ADDITIONAL NAME PLATES.

LABEL PLATE STANDARDS	HULL NO.	DRAWING NO.	SH. NO.	REV
GENERAL NOTES	STD	605-472371	4	A

GENERAL NOTES FOR SELECTION AND TYPE OF LABEL PLATES (CONTD)

A1 1.13 ~~SHEETS 13,33,35,36,37,38 & 39~~ ARE TO BE USED FOR THE LABELING OF VALVES. NO OTHER LABEL PLATE DETAIL SHEETS ARE TO BE USED FOR LABELING VALVES EXCEPT FOR THE CLOSURE TYPE LABELS ON SHEET 14 & 20. WHEN USED ON VALVES, THESE LABELS ARE TO BE FILLED OUT ON B/M ~~PLATE LIST OR WHEN NEED ARISES~~. CLOSURE TYPE LABELS USED ON VALVES ARE TO BE ATTACHED TO FASTENER SHOWN ON SHEETS 38 & 39. THIS DOES NOT PRECLUDE THAT THE CLOSURE TYPE CANNOT BE INCLUDED ON VALVE INSCRIPTION PLATES.

A1 ~~1.14 WHEN 35 REFLECTS THE PROPER DISC TYPE LABELS TO BE USED WITH SHIPYARD STOCKED VALVES. WHERE DISC TYPE LABELS ARE TO BE USED ON VENDOR FURNISHED VALVES, SELECT A LABEL PLATE LOCATED ON 35 THAT IS ACCEPTABLE TO VALVE BEING LABELED BY COMPARING LABEL PLATE DETAILS WITH VALVE HANDWHEEL, WITH A NOT DETAILS.~~

A1 1.15 SQUARE TYPE LABELS & CLAMP FASTENINGS ON SHEET 38 ARE TO BE USED ONLY WHEN METHODS (A) ~~&~~ ~~(B)~~ OF NOTE 1.24 CANNOT BE USED DUE TO ONE OF THE FOLLOWING:

(A) VALVE IS LOCATED IN SUCH A POSITION THAT INSCRIPTION ON ~~DISC OF HANDWHEEL OR~~ DISC TYPE LABEL COULD NOT BE READ. OR HANDWHEEL TYPE OR CONFIGURATION DOES NOT SUIT APPLICATION OF A DISC TYPE LABEL.

(B) INSCRIPTION TOO LONG FOR ~~DISC OF HANDWHEEL OR~~ DISC TYPE LABEL.

A1 1.16 RECTANGULAR TYPE LABELS ON SHEET 35 ARE TO BE USED TO LABEL DAMAGE CONTROL VALVES ~~ONLY, BUT ARE TO BE A LAST RESORT IN THE EVENT THAT METHODS A, B, & C OF NOTE 1.24 CANNOT BE USED DUE TO INSCRIPTION BEING TOO LONG~~. WHEN INSCRIPTION IS TOO LONG.

1.17 ALUMINUM SHALL NOT BE USED FOR PROPULSION PLANT LABEL, INFORMATION & IDENTIFICATION PLATES, WHERE PROHIBITED BY GENERAL SPECIFICATIONS (SEE SECTION 507).

A1 ~~1.18 PROPULSION PLANT METALLIC LABEL PLATES SHALL CONTAIN THE WORDING "DO NOT POLISH", IN 1/4" LETTERS, ONLY WHERE SPECIFIED BY THE GENERAL SPECIFICATIONS (SEE SECTION 507).~~

A1 1.19 WHEN ENGRAVING RIMS OF HANDWHEEL, ADD THE WORDS 'SEE REMARKS' TO MATL ~~& THE~~ COLUMN OF B/M ~~OF LABEL PLATE ORDER SHEET~~ AND 'ENGRAVED IN HANDWHEEL' TO THE REMARKS COLUMN OF B/M. ALSO ADD 'SEE LABEL LIST TO REMARKS COLUMN OF B/M.

A1 1.20 ALL WARNING, SAFETY AND CAUTION LABEL PLATES ARE TO BE PHOTOSENSITIZED ALUMINUM IN ACCORDANCE WITH SHEET 38 ~~WHEN LABEL IS LOCATED IN A LOW LEVEL RED ILLUMINATED AREA (RED LIGHT AREA) SHOULD BE LISTED IN REMARKS COLUMN OF THE LABEL PLATE ORDER SHEET.~~

1.21. ALL LABEL PLATES WHERE A PART OF THE INSCRIPTION INCLUDES A FUEL; OR, LABEL PLATES FOR SEA VALVES SHALL HAVE RED LETTERS ON A NATURAL BACKGROUND.

1.22 PRESSURE-SENSITIVE VINYL CLOSURE CLASSIFICATION LABELS, MIL SPEC MIL-M-43719, TYPE I, CLASS 1, SHALL BE USED WHERE SUCH LABELS CAN BE INSTALLED ON VERTICAL SURFACES AND ON THE UNDERSIDES OF HATCHES, MANHOLES AND SCUTTLES. VINYL CLOSURE CLASSIFICATION LABELS SHALL NOT BE USED FOR THE FOLLOWING:

(A) AREAS SUBJECT TO FOOT TRAFFIC

(B) HOT SPACES (SUCH AS MACHINERY ROOMS)

(C) SYSTEM VALVES OR FITTINGS

(D) ANY APPLICATION OF ANY KIND INVOLVING OR RELATED TO SPECIAL PROPULSION APPLICATIONS.

A1 1.23 ABBREVIATIONS SHALL BE IAW MIL-STD-12

A1 1.24 VALVES SHALL BE LABELED IN THE FOLLOWING ORDER OF PREFERENCE:

(A) INSCRIPTION ON CIRCULAR DISC AND SECURED IN PLACE BY THE HANDWHEEL NUT. (SHEET 33)

B1 (B) INSCRIPTION ON A FLAT RECTANGULAR PLATE CURVED TO FIT THE PIPING (OUTSIDE OF LAGGING, IF ANY) AND WIRED IN PLACE ON PIPE (SHEET 30) ADJACENT TO THE VALVE OR SECURED TO ADJACENT SHIP STRUCTURE. (SHEETS 13 & 35)

(C) INSCRIPTION ON A SQUARE PLATE (SHEET 39A) ATTACHED TO A BACKING PLATE WITH ASSOCIATED RING (CLAMP) (STRAP) FASTENING MOUNTED ON VALVE OR ADJACENT PIPE (SHEETS 38 & 39)

(D) INSCRIPTION ON RIMS OF HANDWHEELS. (SHEET 37) PRIMARY PROPULSION VALVES.

A1 1.25 SELECTION OF STANDARD TYPE LABEL PLATES SHALL BE AS OUTLINED ON SHEETS 8 & 9.

A1 1.26 ACCESS CLOSURE CLASSIFICATION CLOSURE PLATES SHALL BE 4" SQUARE WHEREVER THAT SIZE CAN BE USED.

A1 1.27 VENTL, HEATING & AC SYSTEMS SHALL BE LABELED IN ACCORDANCE WITH SECTION 507C OF GEN. SPECS FOR SHIPS.

LABEL PLATE STANDARDS	HULL NO.	DRAWING NO.	SH NO	REV
GENERAL NOTES	STD	605-4721371	5	B

GENERAL NOTES
FOR PREPARATION OF LABEL PLATES

2.1 ALL ENGRAVED METAL LABEL PLATES AND ALL ENGRAVED VALVE HANDWHEELS, EXCEPT AS OTHERWISE NOTED, ARE TO HAVE THE LETTERING FILLED IN WITH ONE COAT OF BLACK ENAMEL (FEDERAL SPECIFICATIONS TT-E-488, CLASS B, NO. 101) AND PERMITTED A 15 MINUTE AIR-DRY FOLLOWED BY A 20 MINUTE BAKING AT 140 DEGREE F. IF LETTERS ARE NOT TO BE FILLED IN, IT WILL BE NOTED IN THE "REMARKS" COLUMN ON THE LABEL PLATE LIST. WHEN RED LETTERING IS DESIRED, IT WILL BE GIVEN ONE COAT OF RED ENAMEL (FEDERAL SPECIFICATIONS TT-E-488, CLASS B, NO. 106) AND ALLOWED SAME AIR-DRYING AND BAKING TIME AS FOR BLACK ENAMEL.

2.2 ALL ENGRAVED ALUMINUM LABEL PLATES SHALL BE PREPARED AS FOLLOWS PRIOR TO INSTALLATION:

(A) THE BACK OF EACH LABEL PLATE SHALL BE GIVEN ONE COAT OF ZINC CHROMATE PRIMER FORMULA NO. 84 (JAN-P-735).

(B) THE FRONT OF EACH LABEL SHALL BE GIVEN ONE COAT OF SPAR VARNISH.

2.3 ALL ENGRAVED METAL LABEL PLATES SHALL BE ENGRAVED TO A DEPTH OF APPROXIMATELY .015". LAMINATED THERMOSETTING PLASTIC LABEL PLATES SHALL BE ENGRAVED THROUGH THE TOP LAMINATION SO AS TO SHOW A CONTRASTING COLOR.

2.4 MARKAL PAINT STICK B-16, MANUFACTURED BY MARKAL COMPANY MAY BE USED FOR BLACK ENAMEL PAINT TOUCH UP FOR ENGRAVED LABEL PLATES.

LABEL PLATE STANDARDS	HULL NO.	DRAWING NO.	SH NO.	REV
GENERAL NOTES	STD	605-4721371	6	A

GENERAL NOTES
FOR INSTALLATION OF LABEL PLATES

A1 3.1 ALL LABEL PLATES SHALL BE INSTALLED IN ACCORDANCE WITH THE METHODS INDICATED IN THE LABEL PLATE LIST. SEE SHEET 10 FOR TYPE OF FASTENINGS.

3.2 TAPE FOR ATTACHMENT OF LABEL PLATES: EXCEPT AS NOTED IN NOTE 3.3 APPROVED DOUBLE-COATED, NEOPRENE TAPE, MINNESOTA MINING NO. 4264 OR EQUAL SHALL BE USED FOR ATTACHMENT OF BOTH INTERIOR AND EXTERIOR (WEATHER) LABEL PLATES.

3.3 TAPE SHALL NOT BE USED AS A METHOD FOR ATTACHING THE FOLLOWING LABEL PLATES:

(A) PROPULSION PLANT EQUIPMENT, MACHINERY OR SYSTEMS WHERE PROHIBITED BY THE GENERAL SPECS (SEE SECT 507).

(B) EQUIPMENT IDENTIFICATION PLATES (DEFINED AS PLATES INSTALLED BY A MANUFACTURER AS A PART OF HIS MACHINERY OR EQUIPMENT) INCLUDING SUCH PLATES FOR ELECTRICAL AND I.C. FITTINGS BUILT TO 95, 9000 AND 816 SERIES DRAWINGS.

(C) IN AREAS WHERE THE MOUNTING SURFACE IS NOT FLAT, SOLID OR READILY ADAPTABLE TO THE USE OF ADHESIVES, I.E., EXPANDED METAL BULKHEADS AND CURVED SURFACES SUCH AS PIPING.

(D) SURFACES WHICH UNDER EXPECTED OPERATING CONDITIONS, COULD ATTAIN A TEMPERATURE OF MORE THAN 250° F.

(E) THOSE WHICH MUST BE REMOVED FOR CHANGES IN LEGEND OR FOR ANY OTHER REASON.

(F) INDENTED CRES OR NI-CU PLATES.

3.4 ALL METAL LABEL PLATES MOUNTED ON STRUCTURE OF ANY DISSIMILAR METAL, UNLESS ATTACHED BY TAPE, SHALL BE IMBEDDED IN SEALING COMPOUND , (MIL-C-18969). (ALUMILASTIC)

3.5 CORROSION-RESISTING STEEL LABEL PLATES INSTALLED ON STEEL STRUCTURE AND BACKING PLATES SHALL BE SET IN ZINC CHROMATE VINYL FORMULA 8447.

3.6 CRES SCREWS USED FOR SECURING LABEL PLATES EXPOSED TO THE WEATHER ARE TO BE IMBEDDED IN ZINC CHROMATE VINYL NAVY FORMULA 8447 TO MINIMIZE THE CORROSION AT THE SCREW HOLES.

3.7 CARE SHALL BE TAKEN THAT THE HEADS OF MACHINE SCREWS DO NOT COVER ANY PART OF THE LETTER OR FIGURE IN THE INSCRIPTION. THEY SHALL BE ABOUT 1/8" CLEAR OF EACH LETTER OR FIGURE.

3.8 IF NECESSARY TO SECURE LONG PLATES RIGIDLY, TWO (2) ADDITIONAL SCREWS, ONE (1) AT THE TOP AND ONE (1) AT THE BOTTOM MAY BE ADDED AT THE CENTER OF THE PLATE.

3.9 CLASS "A" WIRE FASTENING IS TO BE USED ONLY WHERE NO OTHER SATISFACTORY MEANS OF SECURING LABEL IS PRACTICABLE.

3.10 EXISTING LABELS ON VENDORS EQUIPMENT ARE NOT TO BE REMOVED.

3.11 WHEN AN INFORMATION PLATE IS NOT FURNISHED WITH EQUIPMENT AND NO SPACE IS AVAILABLE TO MOUNT THE NAME PLATE ON THE EQUIPMENT, IT SHALL BE MOUNTED IMMEDIATELY ADJACENT.

3.12 ALL LABEL PLATES INSTALLED ON UNINSULATED PIPING OR COMPONENTS SHALL BE BACKED WITH PLIOBOND NO. 80 CEMENT TO PREVENT NOISE AND ELECTROLYTIC CORROSION.

3.13 WHEN LABEL PLATES ARE REQUIRED FOR CEILING PANELS THEY SHALL BE ATTACHED TO THE CEILING GRID WORK USING 2-#6-32 X 3/16" LONG SELF TAPPING MACHINE SCREWS.

LABEL PLATE STANDARDS	HULL NO.	DRAWING NO.	SH NO.	REV
GENERAL NOTES	STD	605-4721371	7	A

ITEM TO BE LABELED	WHERE USED: MCHRY SPACES (SEE NOTE 1 ON SH 9 & NOTE 1.17 ~~deleted~~)	WHERE USED: OUTSIDE MCHRY SPACES NOT EXPOSED TO WEATHER	WHERE USED: OUTSIDE MCHRY SPACES EXPOSED TO WEATHER	MATERIAL	METHOD OF APPLICATION OF INSCRIPTION	SHEET NO. FOR TYPE OF LABEL PLATES	REMARKS
A1 BATTLE DRESSING STA		✓		SNTZD AL	METAL PHOTO	27	
			✓	CRES	ENGRAVED		
PORTABLE SECT TROLLEY TRACK		✓	✓	SNTZD AL	METAL PHOTO	28	
BULKHEAD NO.	✓	✓		SNTZD AL	METAL PHOTO	13	
FRAME NO.	✓	✓		SNTZD AL	METAL PHOTO	13	
WORKING LOAD	✓	✓		SNTZD AL	METAL PHOTO	28	
			✓	CRES	ENGRAVED		
DOORS HATCHES MANHOLES SCUTTLES TANKS	✓	✓	✓	SNTZD AL	METAL PHOTO	13	
	✓			CRES	ENGRAVED		
VENT CLOSURE INSTRUCTIONS	✓	✓	✓	SNTZD AL	METAL PHOTO	13	
	✓			CRES	ENGRAVED		
BREATHER PLUGS		✓		SNTZD AL		13	
CLOSURE CLASS PLATES	✓	✓	✓	SNTZD AL	METAL PHOTO	19-26	SEE NOTE 1.22
	✓	✓	✓	CRES	ENGRAVED		
CREW BERTH AND LOCKER		✓		SNTZD AL	METAL PHOTO	13	
PEACOAT CLEANING GEAR & MISC LKR		✓	✓	SNTZD AL	METAL PHOTO	13	
LABEL PLATE UNDER HNDWL NUT	✓	✓	✓	SNTZD AL	METAL PHOTO	33	
	✓		✓	CRES	ENGRAVED		SEE NOTE 1.6
COOLING COIL UNIT COOLER GRAVITY COOLING COIL	✓	✓		SNTZD AL	METAL PHOTO	13	
	✓			CRES	ENGRAVED		
PRESSURE & VACUUM GAUGES (WHITE FACE DIALS)	✓	✓		SNTZD AL	METAL PHOTO	13	
	✓			CRES	ENGRAVED		
A1 ~~VENT CLOSURE~~	✓	✓	✓	~~SNTZD AL~~	~~METAL PHOTO~~	~~40~~	
	✓			~~CRES~~	~~ENGRAVED~~		
BI-METALLIC THERMOMETER	✓			SNTZD AL	METAL PHOTO	29	
	✓	✓		CRES	ENGRAVED		
WARNING PLATE OR INSTRUCTION PLATE WITH RED LETTERS	✓	✓	✓	SNTZD AL	METAL PHOTO	13-16, 31 & 32	
	✓			CRES	ENGRAVED		
DECK PLATES	✓	✓	✓	SEE REMARKS COLUMN		17	ENGRAVED IN COVER OR PL
DUCT PASSING THRU COMPARTMENT	✓	✓	✓	SNTZD AL	METAL PHOTO	13	
	✓			CRES	ENGRAVED		
HEATER	✓	✓	✓	SNTZD AL	METAL PHOTO	13	
	✓			CRES	ENGRAVED		

CONTINUED ON SHEET NO. 9

LABEL PLATE STANDARDS	HULL NO.	DRAWING NO.	SH NO.	REV
INSTRUCTIONS FOR MATERIAL AND TYPES OF PLATES TO BE USED	STD	605-4721371	8	A

CONTINUED FROM SHEET NO 8

ITEM TO BE LABELED	WHERE USED: MCHRY SPACES (SEE NOTE 1 THIS SHEET & NOTE 1.17 [illegible])	WHERE USED: OUTSIDE MCHRY SPACES NOT EXPOSED TO WEATHER	WHERE USED: OUTSIDE MCHRY SPACES EXPOSED TO WEATHER	MATERIAL	METHOD OF APPLICATION OF INSCRIPTION	SHEET NO. FOR TYPE OF LABEL PLATES	REMARKS
(A1) UNIT HEATER	✓	✓	✓	SNTZD AL	METAL PHOTO	15	
	✓			CRES	ENGRAVED		
VENT FAN	✓	✓	✓	SNTZD AL	METAL PHOTO	15	
	✓			CRES	ENGRAVED		
VENT FAN CONTROLLER	✓	✓	✓	SNTZD AL	METAL PHOTO	15	
	✓			CRES	ENGRAVED		
VENTILATION FIRE DAMPER	✓	✓	✓	SNTZD AL	METAL PHOTO	15	
	✓			CRES	ENGRAVED		
ELECTRICAL EQPT ONLY	✓	✓		LAMINATED PLASTIC	ENGRAVED	15-16	
HANDWHEEL	✓	✓	✓	SEE REMARKS COLUMN		37	ENGRAVED IN HNDWL
MCHRY EQPT (COOLER, PUMP, ETC)	✓	✓	✓	SNTZD AL	METAL PHOTO	15-16	
	✓			CRES	ENGRAVED		
(A1) LIFTING PADS	✓	✓	✓	SNTZD AL	METAL PHOTO	28A	

NOTES:

1. MCHRY SPACES INCLUDES AUX AND MISC MCHRY SPACES SUCH AS STEERING GEAR ROOM, ELEVATOR MCHRY ROOM, EMER GEN ROOM, PUMP ROOMS, SHAFT ALLEYS, ETC.
2. (A1) FOR ALL VALVES, INCLUDING VENTILATION, CLOSURE CLASSIFICATIONS ARE TO BE ON A SEPARATE PLATE. SEE SHEETS 19 THRU 26 UNLESS SPECIFIED OTHERWISE IN THE LABEL ORDERING DATA.

LABEL PLATE STANDARDS	HULL NO.	DRAWING NO.	SH NO.	REV
INSTRUCTIONS FOR MATERIAL AND TYPES OF PLATES TO BE USED	STD	605-4721371	9	A

TYPE OF FASTENINGS

CLASS	TYPE	MATERIAL	THICKNESS OR SIZE	LENGTH	REMARKS
A	WIRE	CRES	1/16"	TO SUIT WORK	SEE NOTE 3.9
B	SELF TAPPING SCREW	CRES	NO. 6-32 RH	3/8"	
C	DOUBLE COATED NEOPRENE TAPE				SEE NOTE 3.2 & 3.3
D	MACHINE SCREW	CRES	NO. 8-32 RH	3/16"	
E	SECURED TO VALVE STEM				SEE SHEET NO. 33
F	STRAP	AL	SEE SHEET NO. 29		FOR LABELING BIMETALLIC THERM
G	SEE SHEET NO. 18				ARC WELDING STUD AND PIN
H	SEE SHEET NO. 38 & 39				FOR CLAMPING LABEL PLATES ON VALVE OR PIPE
J	SEE SHEET NO. 40 & 41				SPECIAL BACKING PLATES FOR INSULATED VENT DUCTS & PHD

LABEL PLATE STANDARDS	HULL NO.	DRAWING NO.	SH NO.	REV
FASTENINGS	STD	605-4721371	10	A

NORFOLK NAVAL SHIPY

NORFOLK NAVAL SHIPYARD 12345

NORFOLK NAVAL SHIPYARD 123 1/2"

NORFOLK NAVAL SHIPYARD 1 2 3 4 5 1/2"

NORFOLK NAVAL SHIPYARD 1 2 3 4 5 3/8"

NORFOLK NAVAL SHIPYARD 1 2 3 4 5 3/8"

NORFOLK NAVAL SHIPYARD 1 2 3 4 5 9/32" FOR 5/16"

NORFOLK NAVAL SHIPYARD 1 2 3 4 5 9/32" FOR 5/16"

NORFOLK NAVAL SHIPYARD 1 2 3 4 5 1/4"

NORFOLK NAVAL SHIPYARD 1 2 3 4 5 1/4"

NORFOLK NAVAL SHIPYARD 1 2 3 4 5 3/16"

NORFOLK NAVAL SHIPYARD 1 2 3 4 5 3/16"

NORFOLK NAVAL SHIPYARD 1 2 3 4 5 1/8"

NORFOLK NAVAL SHIPYARD 1 2 3 4 5

NORFOLK NAVAL SHIPYARD 1 2 3 4 5 1/8"

NORFOLK NAVAL SHIPYARD 1 2 3 4 5 1/8"

Type Font
HELIOS-REGULAR AND CONDENSED

LABEL PLATE STANDARDS			
METAL PHOTO LETTER SIZES			
HULL NO.	DRAWING NO.	SH NO.	REV
STD	605-4721371	11	A

TABLE FOR ENGRAVED PLATES																									
LENGTH OF LABEL PLATE	LENGTH OF INSC	MAX NO. LETTERS PER LENGTH OF INSCRIPTION																							
		SIZE OF LETTERS																							
		1/8"		3/16"		1/4"		5/16"		3/8"		1/2"		5/8"		3/4"		7/8"		1"		1 1/32"			
		R	C	R	C	R	C	R	C	R	C	R	C	R	C	R	C	R	C	R	C	R	C		
	1"	8	10	5	7	4	5	3	4	2	3	2	2	1	2	1	1	1	1	1	1	1	1		
2"	1-1/8"	9	12	6	8	4	6	3	4	3	4	2	3	1	2	1	2	1	1	1	1	1	2		
3"	2-1/8"	17	22	11	15	8	11	6	9	5	7	4	5	3	4	2	3	2	3	2	2	2	2		
4"	3-1/8"	25	33	16	22	12	16	10	13	8	11	6	8	5	6	4	5	3	4	3	4	3	4		
5"	4-1/8"	33	44	22	29	16	22	13	17	11	14	8	11	6	8	6	7	4	6	4	6	4	4		
6"	5-1/8"	41	54	27	36	20	27	16	21	13	18	10	13	8	10	9	10	7	8	6	7	5	6		
8"	7-1/8"	57	76	38	50	28	38	22	30	19	25	14	19	11	15	9	12	8	10	7	9	7	10		
10"	9-1/8"	73	97	48	64	36	48	29	38	24	32	18	24	14	19	12	16	10	13	9	12	9	12		

NOTES:

1. TABLE ABOVE INDICATES MAXIMUM NUMBER OF REGULAR (R) AND CONDENSED (C) LETTERS WHICH CAN BE COMPRISED IN ONE ROW ON RECTANGULAR LABEL PLATES ACCORDING TO LENGTH OF PLATE AS INDICATED IN COLUMN 1.

2. WHEN IT IS NECESSARY TO USE A PLATE OF A PREDETERMINED LENGTH, PLACE THIS INFORMATION ON THE APPLICABLE ORDERING DATA.

3. FOR GUIDANCE IN DETERMINING LENGTHS OF LABEL PLATES MADE BY THE METAL PHOTO PROCESS, SEE TABULATION BELOW.

TABLE FOR METAL PHOTO LABEL PLATES																									
LENGTH OF LABEL PLATE		MAX NO. LETTERS PER LENGTH OF INSCRIPTION																							
		SIZE OF LETTERS																							
		1/8"		3/16"		1/4"		5/16"		3/8"		1/2"													
		R	C	R	C	R	C	R	C	R	C	R	C												
		14	12	16	-	24	24	30	-	36	36	48	48												
	1"	8	12	6	-	5	7	4	-	3	5	2	3												
2"	1-1/8"	9	14	6	-	5	8	4	-	3	5	2	4												
3"	2-1/8"	17	26	12	-	11	15	9	-	7	11	5	8												
4"	3-1/8"	25	38	18	-	16	22	13	-	10	16	7	10												
5"	4-1/8"	33	50	24	-	21	29	17	-	13	21	10	13												
6"	5-1/8"	41	62	30	-	26	36	21	-	16	26	13	20												
8"	7-1/8"	57	86	42	-	38	50	30	-	23	37	17	26												
10"	9-1/8"	73	110	54	-	48	64	39	-	30	48	22	28												

LABEL PLATE STANDARDS	HULL NO.	DRAWING NO.	SH NO.	REV
LETTER LIMITATIONS	STD	605-4721371	12	A

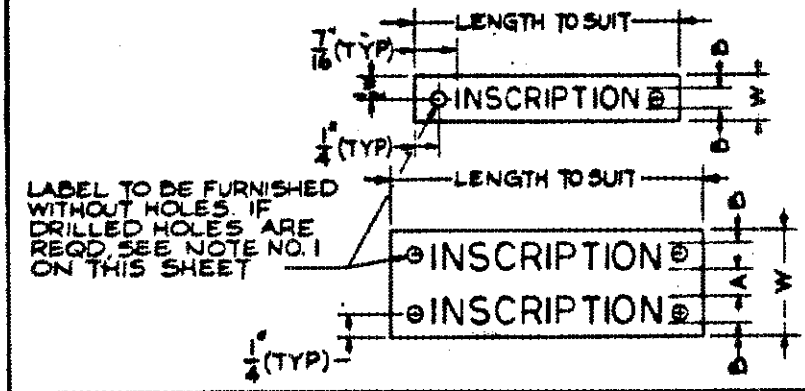

LETTER HGT IN INCHES	DIM OF LABEL	NO. OF LINES OF LETTERING														
		1	2	3	4	5	6	7	8	9	10	11	12	13	14	15
1/8"	A	—	1/8"	1/8"	1/8"	1/8"	1/8"	1/8"	1/8"	1/8"	1/8"	1/8"	1/8"	1/8"	1/8"	1/8"
	B	1/4"	1/8"	1/8"	3/16"	3/16"	7/16"	3/16"	3/16"	9/16"	7/16"	5/16"	3/16"	3/16"	3/16"	3/16"
	W	5/8"	5/8"	7/8"	1-1/4"	1-1/2"	2-1/4"	2-1/4"	2-1/4"	3-1/4"	3-1/4"	3-1/4"	3-1/4"	3-1/2"	3-3/4"	4"
3/16"	A	—	1/8"	1/8"	1/8"	1/8"	1/8"	3/16"	1/8"	1/8"	1/8"	1/8"	1/8"	1/8"	1/8"	1/8"
	B	7/32"	3/16"	7/32"	3/16"	13/32"	1/4"	13/32"	7/16"	9/32"	1/8"	3/32"	3/16"	5/32"	1/8"	5/32"
	W	5/8"	7/8"	1-1/4"	1-1/2"	2-1/4"	2-1/4"	3-1/4"	3-1/4"	3-1/4"	3-1/4"	3-1/2	4"	4-1/4"	4-1/2"	5"
1/4"	A	—	1/8"	1/8"	1/8"	1/8"	3/16"	1/8"	1/8"	1/8"	1/8"	1/8"	1/8"	1/8"	1/8"	1/8"
	B	3/16"	5/16"	1/4"	7/16"	1/4"	13/32"	3/8"	3/16"	5/8"	3/16"	1/8"	3/16"	1/8"	3/16"	3/16"
	W	5/8"	1-1/4"	1-1/2"	2-1/4"	2-1/4"	3-1/4"	3-1/4"	3-1/4"	4"	4"	4-1/4"	4-3/4"	5"	5-1/2"	6"
5/16"	A	—	3/16"	3/16"	3/16"	3/16"	3/16"	3/16"	3/16"	3/16"	3/16"	3/16"	3/16"	3/16"	3/16"	3/16"
	B	7/32"	7/32"	7/32"	7/32"	7/32"	7/32"	7/32"	7/32"	7/32"	7/32"	7/32"	7/32"	7/32"	7/32"	7/32"
	W	3/4"	1-1/4"	1-3/4"	2-1/4"	2-3/4"	3-1/4"	3-3/4"	4-1/4"	4-3/4"	5-1/4"	5-3/4"	6-1/4"	6-3/4"	7-1/4"	7-3/4"
3/8"	A	—	3/16"	3/16"	3/16"	3/16"	1/4"	3/16"	1/4"	3/16"	3/16"	3/16"	3/16"	3/16"	3/16"	3/16"
	B	1/4"	9/32"	3/8"	19/32"	5/16"	1/4"	1/4"	1/4"	3/16"	13/32"	1/4"	11/32"	3/16"	9/32"	1/4"
	W	7/8"	1-1/2"	2-1/4"	3-1/4"	3-1/4"	4"	4-1/4"	5-1/4"	5-1/4"	6-1/4"	6-1/2"	7-1/4"	7-1/2"	8-1/4"	8-3/4"
1/2"	A	—	3/16"	3/16"	1/4"	1/4"	1/4"	3/16"	3/16"	1/4"	3/16"	1/4"	1/4"	1/4"	1/4"	1/4"
	B	3/16"	5/32"	3/16"	1/4"	1/4"	3/8"	3/16"	15/32"	3/8"	9/32"	1/4"	1/4"	1/4"	1/4"	1/4"
	W	7/8"	1-1/2"	2-1/4"	3-1/4"	4"	5-1/4"	5-1/4"	6-1/4"	7-1/4"	7-1/4"	8"	9-1/4"	10	10-3/4"	11-1/2"
3/4"	A	—	1/4"	1/4"	1/4"	1/4"	1/4"	1/4"	1/4"	3/16"	1/4"	1/4"	—	—	—	—
	B	1/4"	1/4"	1/4"	1/4"	1/4"	1/4"	1/4"	1/4"	3/16"	1/4"	1/4"	—	—	—	—
	W	1-1/4"	2-1/4"	3-1/4"	4-1/4"	5-1/4"	6-1/4"	7-1/4"	8-1/4"	8-1/4"	10-1/4"	11-1/4"	—	—	—	—
1"	A	—	1/2"	1/4"	1/4"	3/16"	1/4"	1/4"	1/4"	1/4"	1/4"	—	—	—	—	—
	B	1/4"	3/8"	1/4"	1/4"	1/4"	1/2"	1/4"	1/4"	1/4"	3/8"	—	—	—	—	—
	W	1-1/2"	3-1/4"	4"	5-1/4"	6-1/4"	8-1/4"	9"	10-1/4"	11-1/2"	13"	—	—	—	—	—

NOTES:

1. DRILL TWO 5/32" DIA HOLES FOR PLATES UP TO AND INCLUDING 1-1/2" WIDE. DRILL FOUR 5/32" DIA HOLES FOR PLATES OVER 1-1/2" WIDE.
2. TABULATIONS ARE FOR ENGRAVED & METAL PHOTO PLATES.
3. IF HOLES ARE REQUIRED FOR MOUNTING, MAKE NOTATION IN THE "REMARKS" COLUMN OF THE APPLICABLE ORDERING DATA.

LABEL PLATE STANDARDS	HULL NO.	DRAWING NO.	SH NO.	REV
RECTANGULAR PLATE UNIFORM LETTERING	STD	605-4721371	13	A

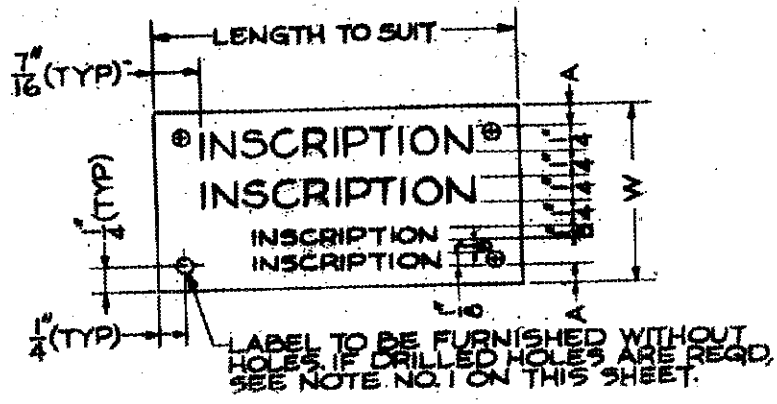

NO. OF LINES OF 1/8" LETTERS	DIM OF LABEL PLATE	NO. OF LINES OF 1/4" LETTERS				
		1	2	3	4	5
1	A	3/16"	3/16"	3/16"	3/16"	3/16"
	W	1"	1 1/2"	2"	2 1/2"	3"
2	A	3/16"	3/16"	3/16"	3/16"	3/16"
	W	1 1/4"	1 3/4"	2 1/4"	2 3/4"	3 1/4"
3	A	3/16"	3/16"	3/16"	3/16"	3/16"
	W	1 1/2"	2"	2 1/2"	3"	3 1/2"
4	A	3/16"	3/16"	3/16"	3/16"	3/16"
	W	1 3/4"	2 1/4"	2 3/4"	3 1/4"	3 3/4"
5	A	3/16"	3/16"	3/16"	3/16"	3/16"
	W	2"	2 1/2"	3"	3 1/2"	4"

NOTES:

1. DRILL TWO 5/32" DIA HOLES FOR PLATES UP TO AND INCLUDING 1-1/2" WIDE. HOLES TO BE EQUALLY SPACED BETWEEN EDGES. DRILL FOUR 5/32" DIA HOLES FOR PLATES OVER 1-1/2" WIDE.
2. ALL ROWS OF 1/4" LETTERS ARE ALWAYS ABOVE THE ROWS OF 1/8" LETTERS.
3. TABULATIONS ARE FOR ENGRAVED & METAL PHOTO PLATES.
4. IF HOLES ARE REQUIRED FOR MOUNTING, MAKE NOTATION IN THE APPLICABLE ORDERING DATA.

LABEL PLATE STANDARDS RECTANGULAR PLATE 1/4" & 1/8" LETTERING	HULL NO.	DRAWING NO.	SH. NO.	REV
	STD	605-4721371	14	A

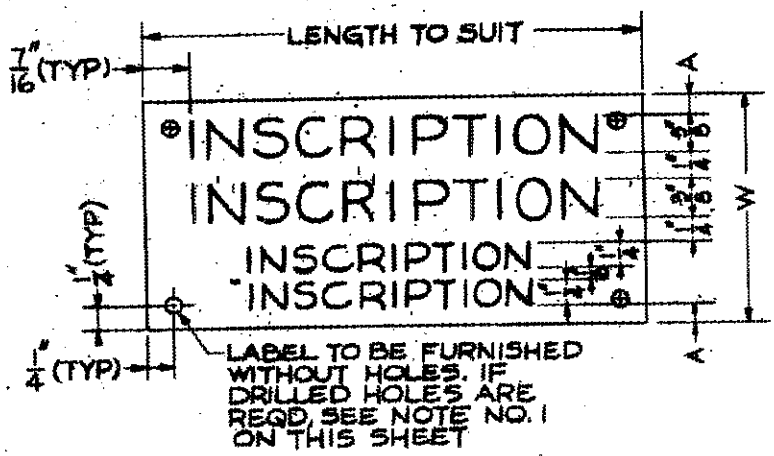

NO. OF LINES OF 1/4" LETTERS	DIM OF LABEL PLATE	NO. OF LINES OF 3/8" LETTERS				
		1	2	3	4	5
1	A	3/16"	3/8"	9/16"	1/4"	5/16"
	W	1 1/4"	2 1/4"	3 1/4"	3 1/4"	4"
2	A	1/2"	3/16"	3/8"	7/16"	1/4"
	W	2 1/4"	2 1/4"	3 1/4"	4"	4 1/4"
3	A	5/16"	1/2"	3/16"	1/4"	9/16"
	W	2 1/4"	3 1/4"	3 1/4"	4"	5 1/4"
4	A	5/8"	5/16"	3/8"	3/16"	3/8"
	W	3 1/4"	3 1/4"	4"	4 1/4"	5 1/4"
5	A	7/16"	1/2"	3/16"	1/2"	3/16"
	W	3 1/4"	4"	4"	5 1/4"	5 1/4"

NOTES:

1. DRILL TWO 5/32" DIA HOLES FOR PLATES UP TO AND INCLUDING 1-1/2" WIDE. HOLES TO BE EQUALLY SPACED BETWEEN EDGES. DRILL FOUR 5/32" DIA HOLES FOR PLATES OVER 1-1/2" WIDE.
2. ALL ROWS OF 3/8" LETTERS ARE ALWAYS ABOVE THE ROWS OF 1/4" LETTERS.
3. TABULATIONS ARE FOR ENGRAVED & METAL PHOTO PLATES.
4. IF HOLES ARE REQUIRED FOR MOUNTING, MAKE NOTATION IN THE APPLICABLE ORDERING DATA.

LABEL PLATE STANDARDS	HULL NO.	DRAWING NO.	SH NO.	REV
RECTANGULAR PLATE 3/8" & 1/4" LETTERING	STD	605-4721371	15	A

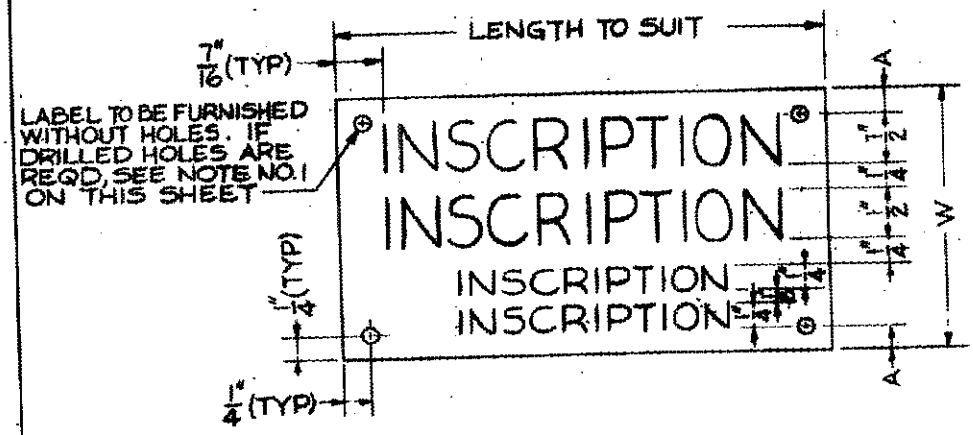

NO. OF LINES OF 1/4" LETTERS	DIM OF LABEL PLATE,	NO. OF LINES OF 3/8" LETTERS				
		1	2	3	4	5
1	A	1/4"	1/4"	3/8"	3/8"	3/8"
	W	1 1/2"	2 1/4"	3 1/4"	4"	5 1/4"
2	A	7/16"	9/16"	3/16"	3/16"	7/16"
	W	2 1/4"	3 1/4"	3 1/4"	4"	5 1/4"
3	A	1/4"	3/8"	3/8"	5/8"	1/4"
	W	2 1/4"	3 1/4"	4"	5 1/4"	5 1/4"
4	A	9/16"	3/16"	3/16"	7/16"	9/16"
	W	3 1/4"	3 1/4"	4"	5 1/4"	6 1/4"
5	A	3/8"	3/8"	5/8"	1/4"	3/8"
	W	3 1/4"	4"	5 1/4"	5 1/4"	6 1/4"

NOTES:
1. DRILL TWO 5/32" DIA HOLES FOR PLATES UP TO AND INCLUDING 1-1/2" WIDE. HOLES TO BE EQUALLY SPACED BETWEEN EDGES. DRILL FOUR 5/32" DIA HOLES FOR PLATES OVER 1-1/2" WIDE.
2. ALL ROWS OF 1/2" LETTERS ARE ALWAYS ABOVE THE ROWS OF 1/4" LETTERS.
3. TABULATIONS ARE FOR ENGRAVED & METAL PHOTO PLATES.
4. IF HOLES ARE REQUIRED FOR MOUNTING, MAKE NOTATION IN THE APPLICABLE ORDERING DATA.

LABEL PLATE STANDARDS RECTANGULAR PLATE 1/2" & 1/4" LETTERING	HULL NO.	DRAWING NO.	SH NO.	RE
	STD	605-4721371	16	A

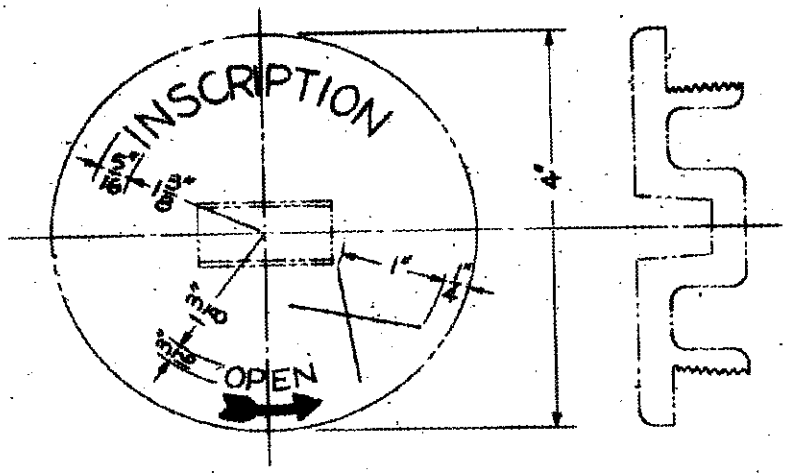

NOTES:

1. INSCRIPTION TO BE ENGRAVED 1/16" DEEP INTO THE COVER; NO SPECIAL PLATE IS REQUIRED.
2. TYPE OF CLOSURE LETTER, "W", "X", "Y" OR "Z" MUST BE INDICATED IN THE APPLICABLE ORDERING DATA.
3. THE LETTERS "W", "X" & "Y" ARE TO BE PAINTED BLACK AND THE LETTER "Z" IS TO BE PAINTED RED.
4. INSCRIPTIONS FOR SEA VALVES AND THAT PART OF ANY OTHER INSCRIPTION DENOTING FUELS ARE TO BE PAINTED RED. ALL OTHERS ARE TO BE PAINTED BLACK.

LABEL PLATE STANDARDS	HULL NO.	DRAWING NO.	SH NO.	REV
ENGRAVED COVER	STD	605-4721371	17	A

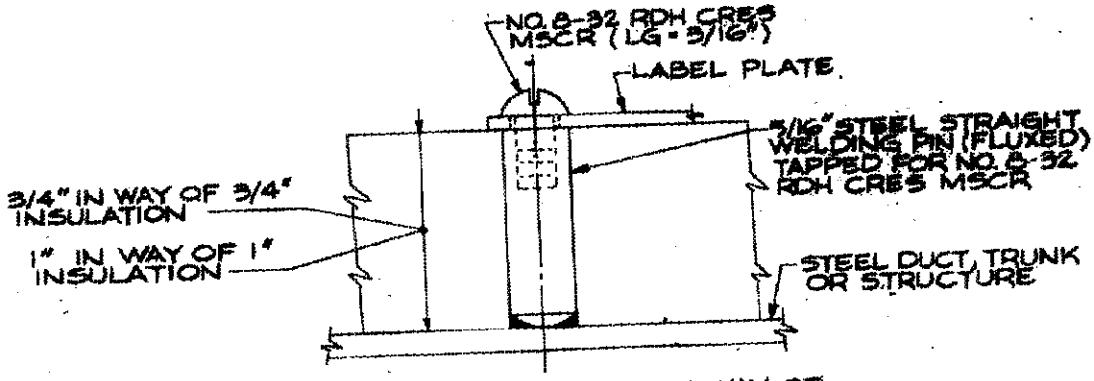

LABEL PLATE FASTENER IN WAY OF INSULATED STEEL DUCTS, TRUNKS, ETC.

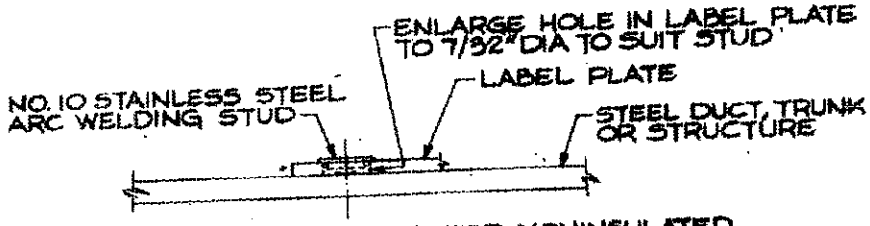

LABEL PLATE FASTENER FOR NONINSULATED STEEL DUCTS, TRUNKS OR STRUCTURE

LABEL PLATE STANDARDS	HULL NO.	DRAWING NO.	SH NO.	REV
LABEL PLATE FASTENERS	STD	605-4721371	18	A

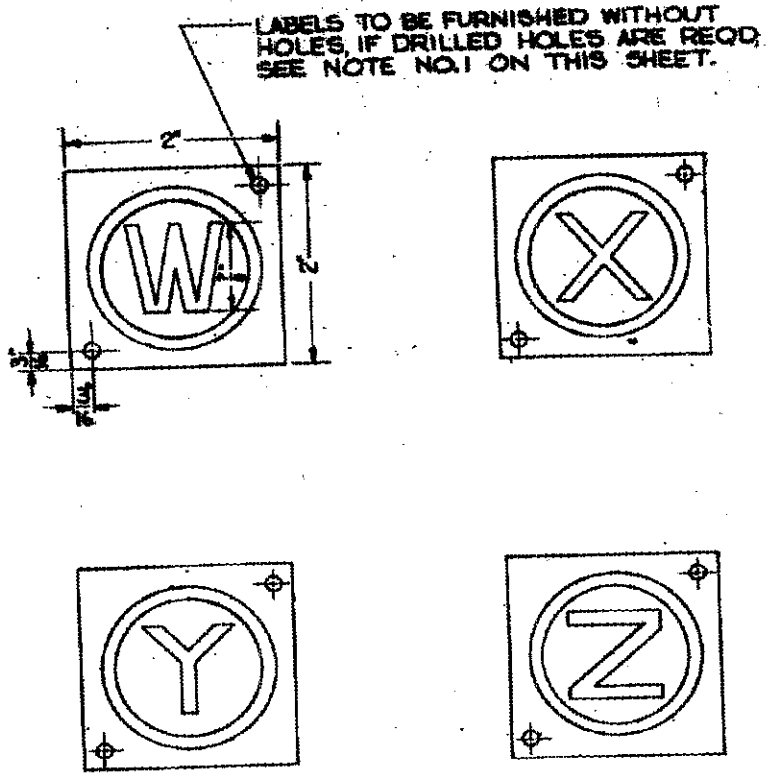

NOTES:

1. DRILL TWO DIAGONAL 5/32" DIAMETER HOLES FOR MOUNTING.
2. THE LETTERS "W" "X" AND "Y" ARE TO BE BLACK.
3. THE LETTER "Z" IS TO BE RED WITH A NATURAL BACKGROUND.
4. DIMENSIONS FOR PLATES "X", "Y" & "Z" ARE SIMILAR TO PLATE "W".
5. LETTER NEEDED SHOULD BE INDICATED IN THE APPLICABLE ORDERING DATA.

LABEL PLATE STANDARDS	HULL NO.	DRAWING NO.	SH NO.	REV
CLOSURE TYPE-SQUARE 7/8" CIRCLED LETTERS	STD	605-4721371	19	A

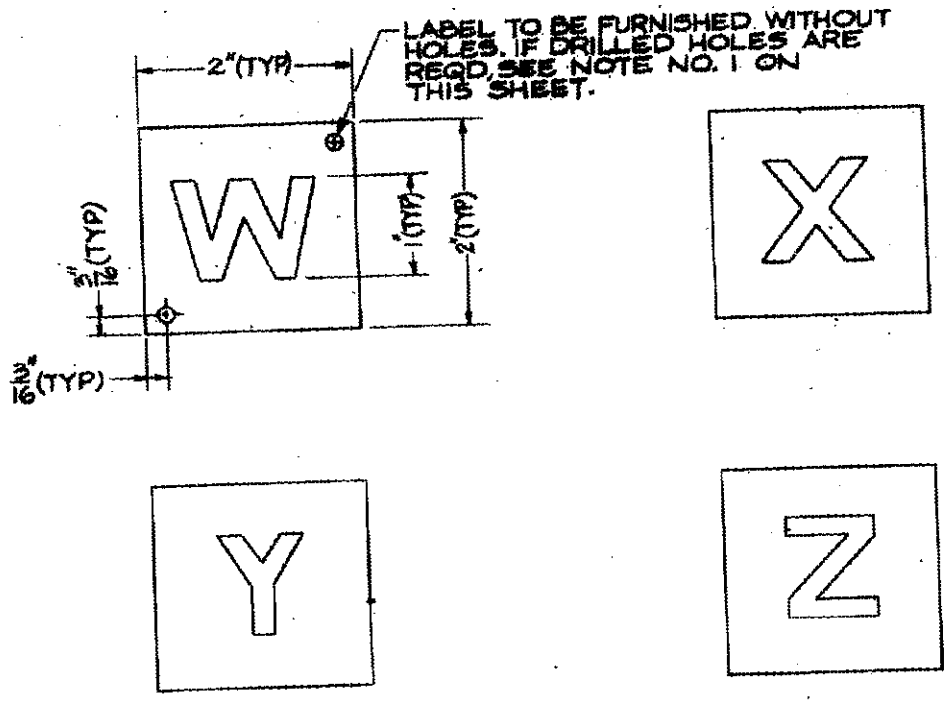

NOTES:

1. DRILL TWO 5/32" DIA HOLES DIAGONALLY SPACED.
2. THE LETTERS "W", "X" & "Y" ARE TO BE BLACK.
3. THE LETTER "Z" IS TO BE RED.
4. IF HOLES ARE REQUIRED FOR MOUNTING, MAKE NOTATION IN THE APPLICABLE ORDERING DATA.
5. LETTER NEEDED SHOULD BE INDICATED IN THE APPLICABLE ORDERING DATA.

LABEL PLATE STANDARDS	HULL NO.	DRAWING NO.	SH. NO.	REV
CLOSURE TYPE-SQUARE-1" LETTER	STD	605-4721371	20	A

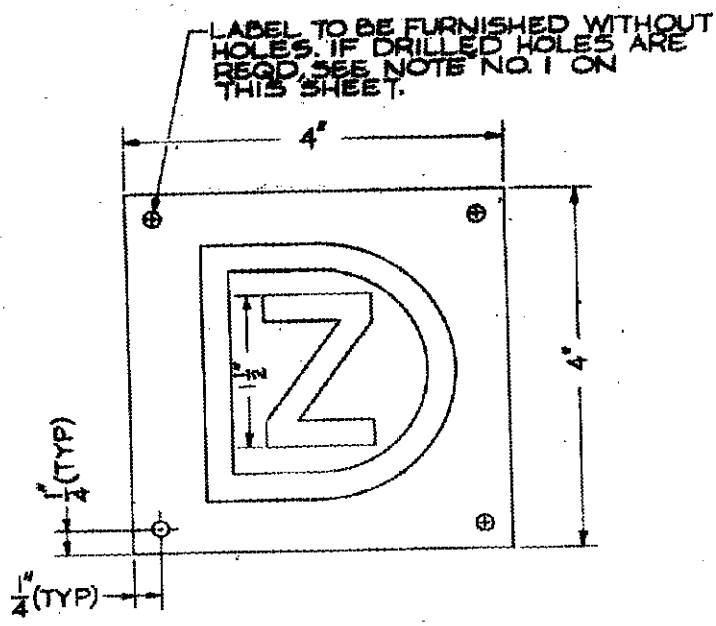

NOTES:
1. DRILL FOUR 5/32" DIA HOLES.
2. THE LETTER Z IS TO BE RED.
3. THE LETTER D IS TO BE BLACK.
4. IF HOLES ARE REQUIRED FOR MOUNTING, MAKE NOTATION IN THE APPLICABLE ORDERING DATA.

LABEL PLATE STANDARDS	HULL NO.	DRAWING NO.	SH NO.	REV
CLOSURE TYPE-SQUARE 1-1/2" LETTERS-DARKENED SHIP	STD	605-4721371	21	A

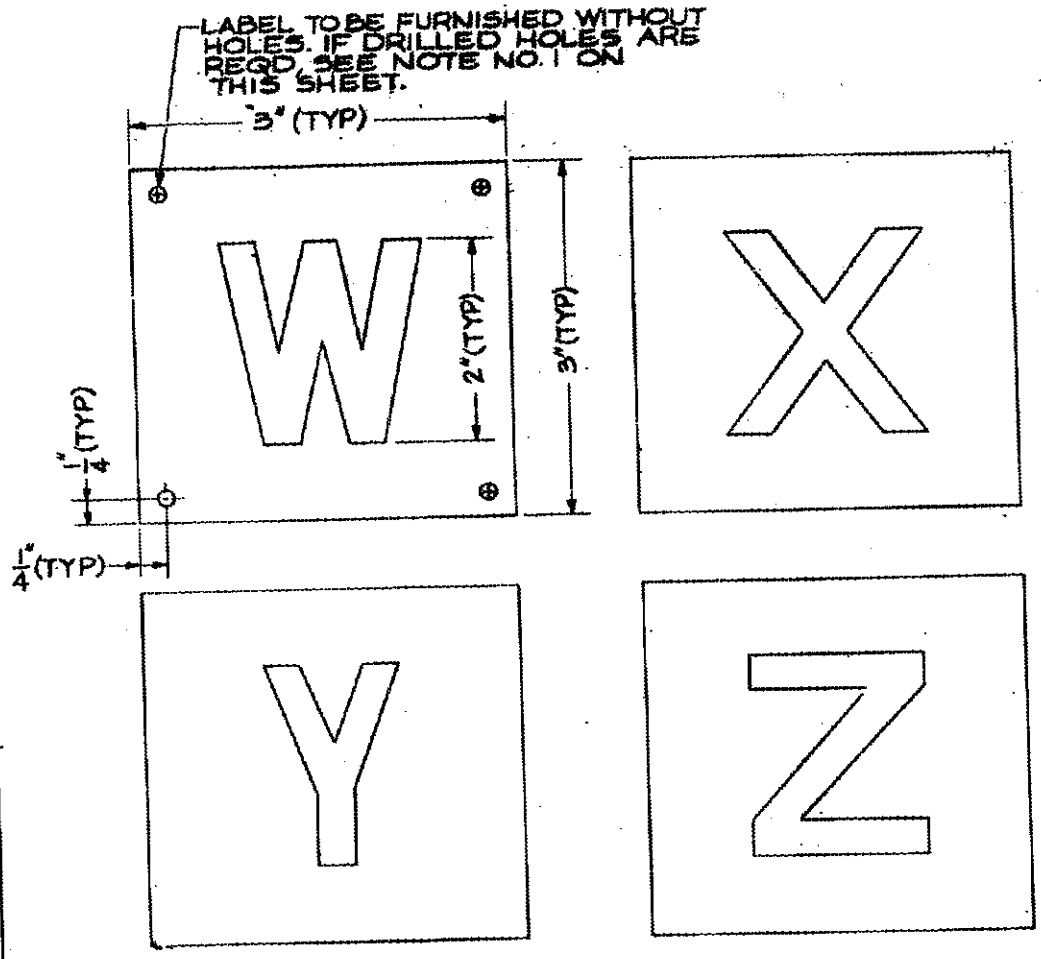

NOTES:
1. DRILL FOUR 5/32" DIA HOLES.
2. THE LETTERS "W", "X" & "Y" ARE TO BE BLACK.
3. THE LETTER "Z" IS TO BE RED.
4. IF HOLES ARE REQUIRED FOR MOUNTING, MAKE NOTATION IN THE APPLICABLE ORDERING DATA.
5. LETTER NEEDED SHOULD BE INDICATED IN THE APPLICABLE ORDERING DATA.

LABEL PLATE STANDARDS	HULL NO.	DRAWING NO.	SH NO.	REV
CLOSURE TYPE-SQUARE-2" LETTER	STD	605-4721371	22	A

4721371 SH 22

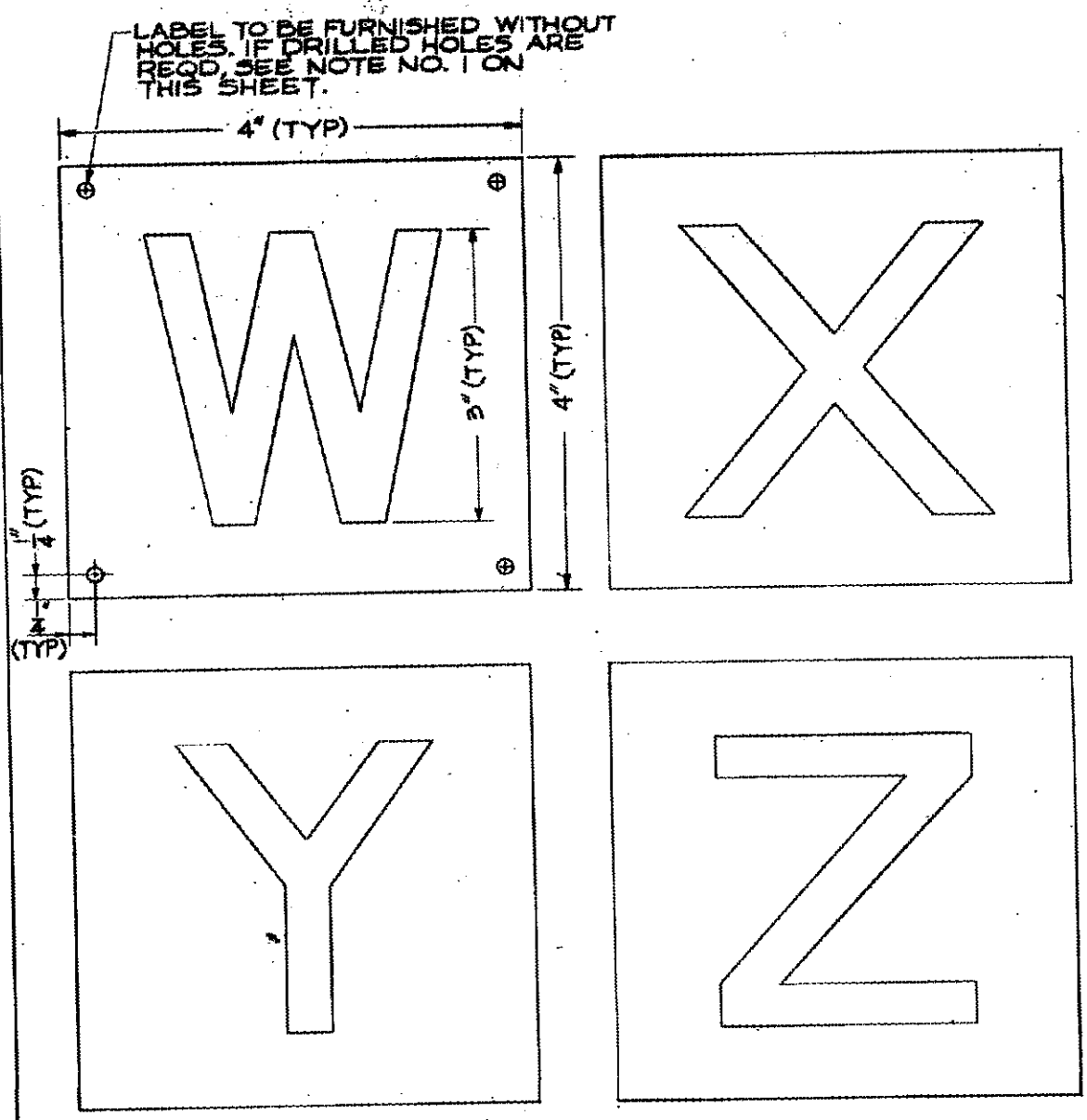

NOTES:

1. DRILL FOUR 5/32" DIA HOLES.
2. THE LETTERS "W", "X" & "Y" ARE TO BE BLACK.
3. THE LETTER "Z" IS TO BE RED.
4. IF HOLES ARE REQUIRED FOR MOUNTING, MAKE NOTATION IN THE APPLICABLE ORDERING DATA.
5. LETTER NEEDED SHOULD BE INDICATED IN THE APPLICABLE ORDERING DATA.

LABEL PLATE STANDARDS	HULL NO.	DRAWING NO.	SH NO.	REV
CLOSURE TYPE-SQUARE-3" LETTER	STD	605-4721371	23	A

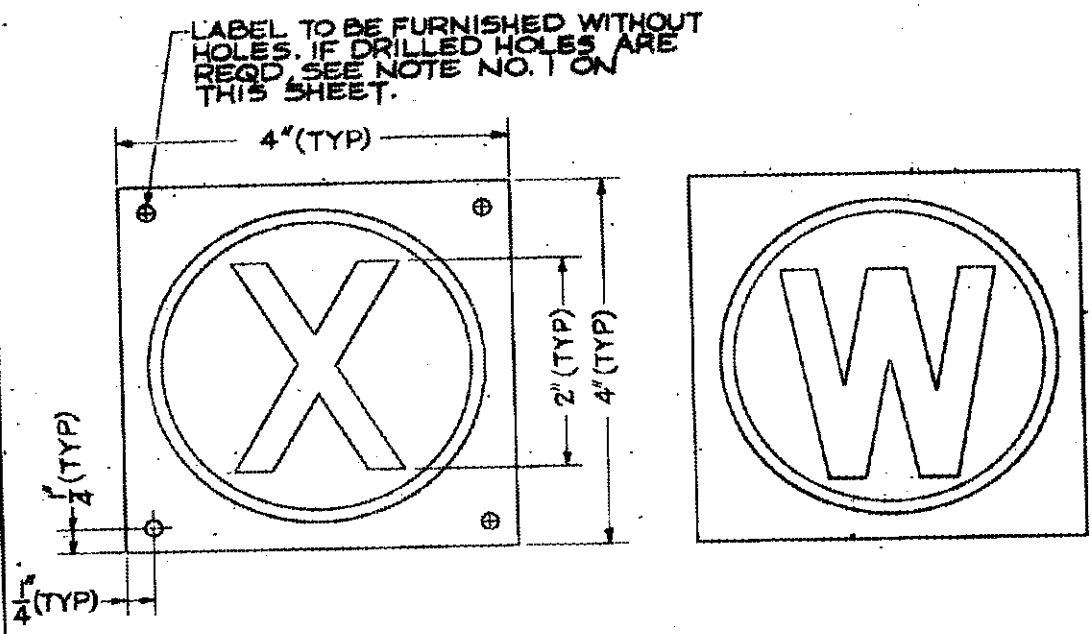

NOTES:

1. DRILL FOUR 5/32" DIA HOLES.
2. THE LETTERS AND CIRCLES ARE TO BE BLACK.
3. IF HOLES ARE REQUIRED FOR MOUNTING, MAKE NOTATION IN THE APPLICABLE ORDERING DATA.

LABEL PLATE STANDARDS	HULL NO.	DRAWING NO.	SH NO.	REV
CLOSURE TYPE-SQUARE 2" LETTERS-"X" & "W" CIRCLED	STD	605-4721371	24	A

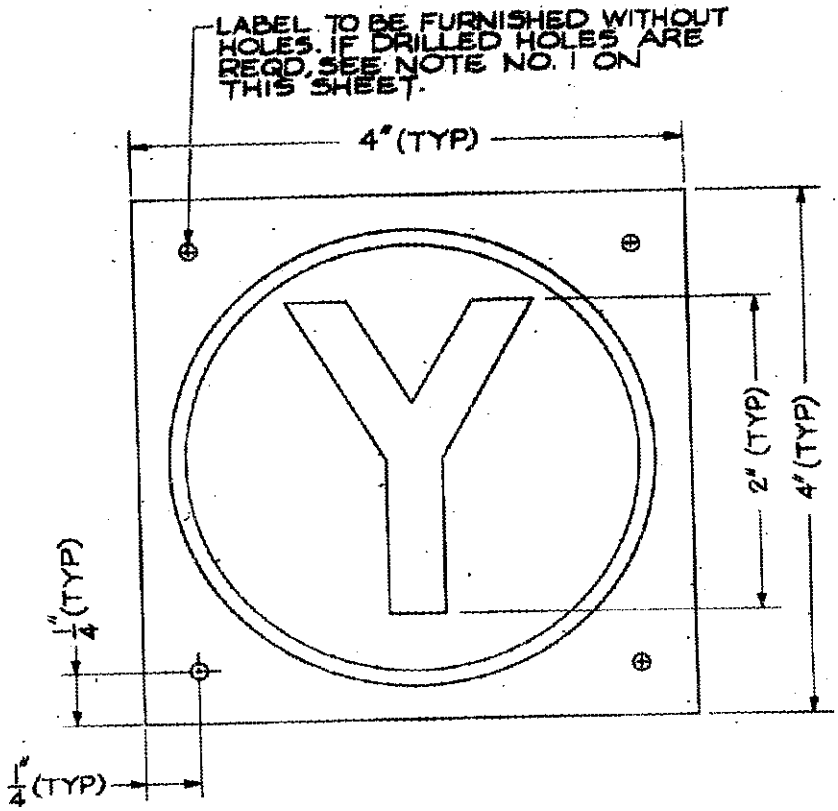

NOTES:
1. DRILL ~~FOUR~~ 5/32" DIA HOLES.
2. THE LETTER "Y" AND THE CIRCLE ARE TO BE BLACK.
3. IF HOLES ARE REQUIRED FOR MOUNTING, MAKE NOTATION IN THE APPLICABLE ORDERING DATA.

LABEL PLATE STANDARDS CLOSURE TYPE-SQUARE 2" LETTER "Y" CIRCLED	HULL NO.	DRAWING NO.	SH NO.	REV
	STD	605-4721371	25	A

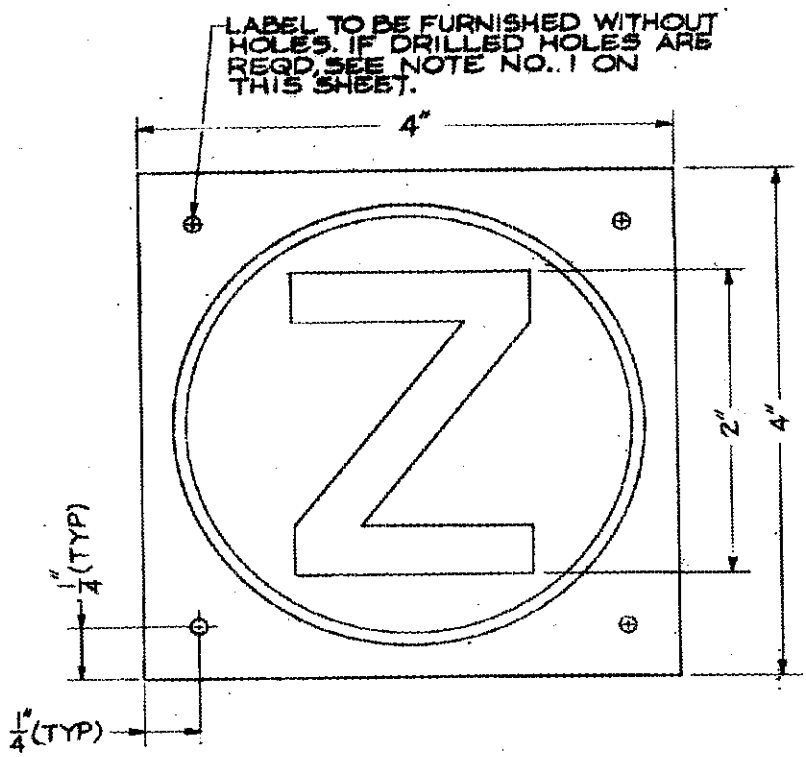

NOTES:
1. DRILL FOUR 5/32" DIA HOLES.
2. IF HOLES ARE REQUIRED FOR MOUNTING, MAKE NOTATION IN THE APPLICABLE ORDERING DATA.
3. THE LETTER "Z" AND THE CIRCLE ARE TO BE RED.

LABEL PLATE STANDARDS	HULL NO.	DRAWING NO.	SH NO.	REV
CLOSURE TYPE-SQUARE 2" LETTER-"Z" CIRCLED	STD	605-4721371	26	A

4721371 SH 26

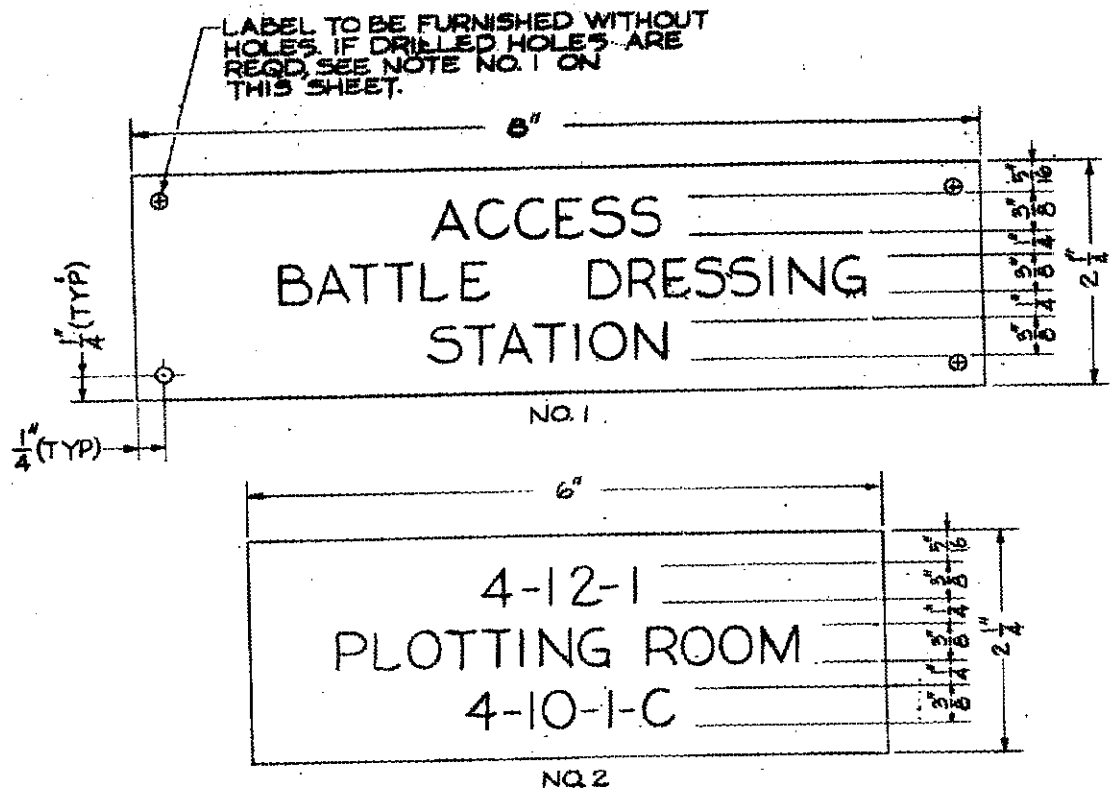

NOTES:

1. DRILL FOUR 5/32" DIA HOLES.
2. IF HOLES ARE REQUIRED FOR MOUNTING, MAKE NOTATION IN THE APPLICABLE ORDERING DATA.
3. LABEL PLATE NO. 1 IS TO HAVE RED LETTERS WITH A NATURAL BACKGROUND.
4. LABEL PLATE NO. 2 IS TO HAVE BLACK LETTERS AND NUMBERS.
5. (A1) INSCRIPTION ON LABEL PLATES NO 1 & 2 IS TYPICAL.

LABEL PLATE STANDARDS	HULL NO.	DRAWING NO.	SH NO.	REV
COMPARTMENT LABEL PLATES	STD	605-4721371	27	A

4721371 SH 27

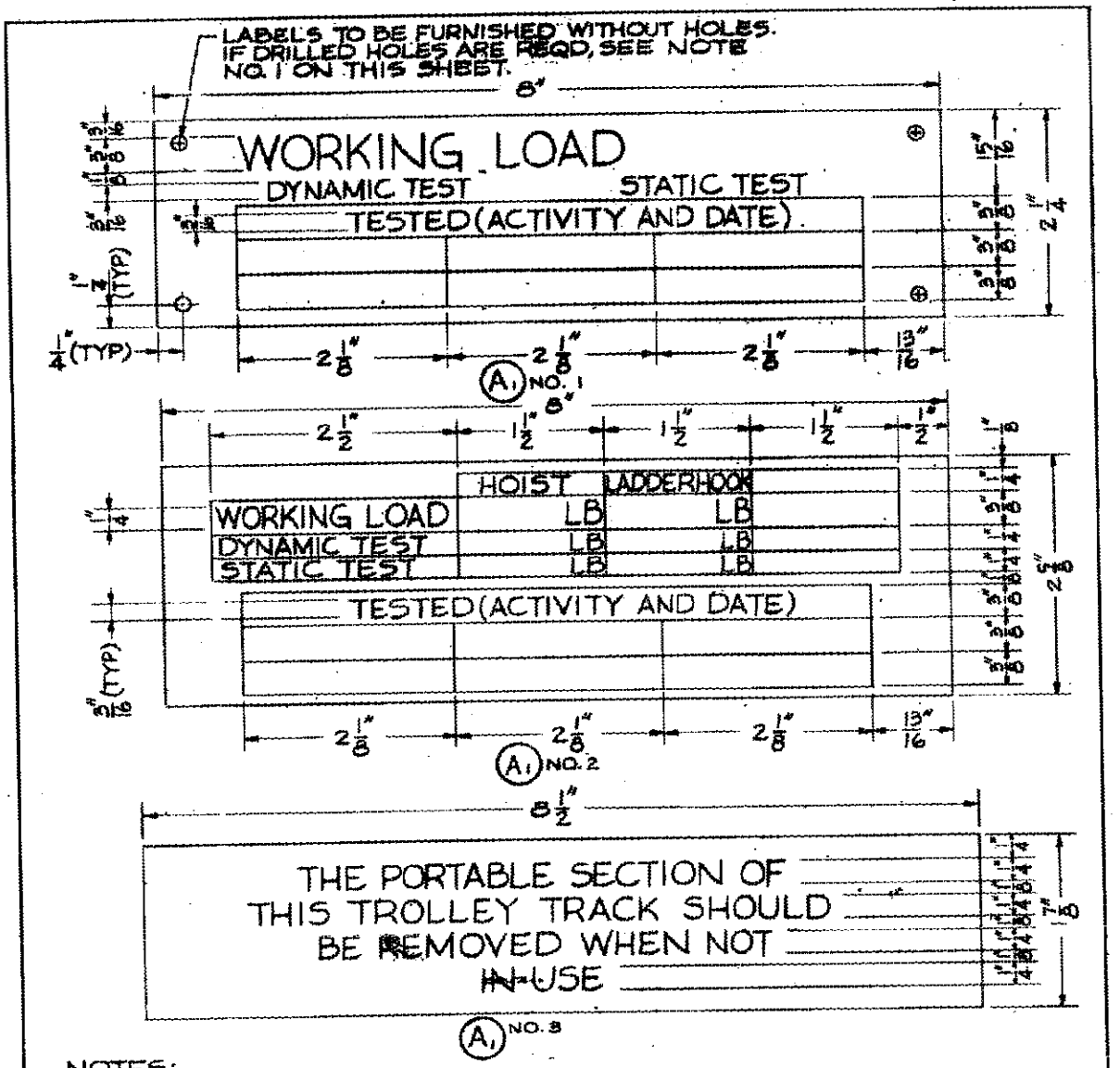

NOTES:
1. DRILL FOUR 5/32" DIA HOLES.
2. IF HOLES ARE REQUIRED FOR MOUNTING, MAKE NOTATION IN THE APPLICABLE ORDERING DATA.

LABEL PLATE STANDARDS	HULL NO.	DRAWING NO.	SH NO.	REV
WORKING LOAD & TROLLEY TRACK	STD	605-4721371	28	A

4721371 SH 28

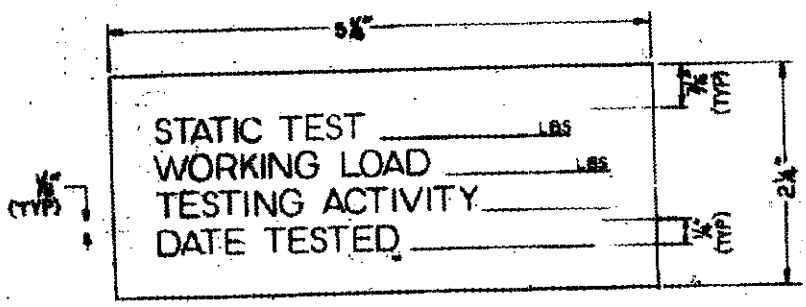

NOTES:
1. ALL LETTERS TO BE BLACK.
2. CLASS "C" INSTALLATION, SEE SHEET #10.

LABEL PLATE STANDARDS	HULL NO.	DRAWING NO.	SH. NO.	REV.
LIFTING PAD LABEL PLATE	STD	605-4721371	28A	A

4721371 SH 28A

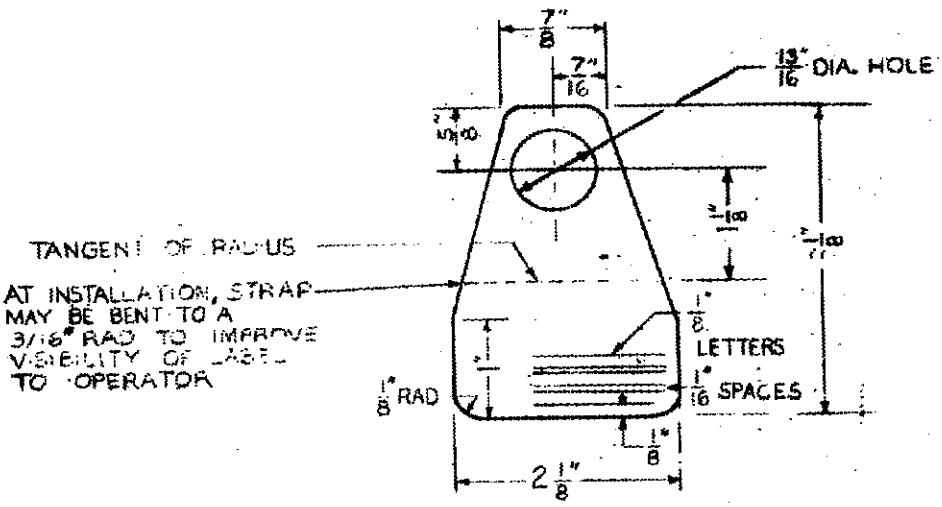

NOTES:
1. MAX NO. OF LINES TO BE USED IS 4. WHEN POSSIBLE USE ONLY BOTTOM 3 LINES.
2. MATERIAL OF PLATE TO BE 1/16" SENSITIZED ALUMINUM OR .05" COPPER.

LABEL PLATE STANDARDS	HULL NO.	DRAWING NO.	SH NO.	REV
USE WHEN LABELING BIMETALLIC THERM	STD	605-4721371	29	A

4721371 SH 29

WIRE MUST BE TIGHT ENOUGHT TO PREVENT LABEL PLATE FROM ROTATING AROUND PIPE, LABEL PLATE MUST BE LOCATED TO INSURE PROPER VISIBILITY, AND NO FRAYED OR LOOSE ENDS OF WIRE STRANDS SHALL BE EXPOSED.

TWISTED ENDS TO BE BENT FLAT AGAINST PIPE.

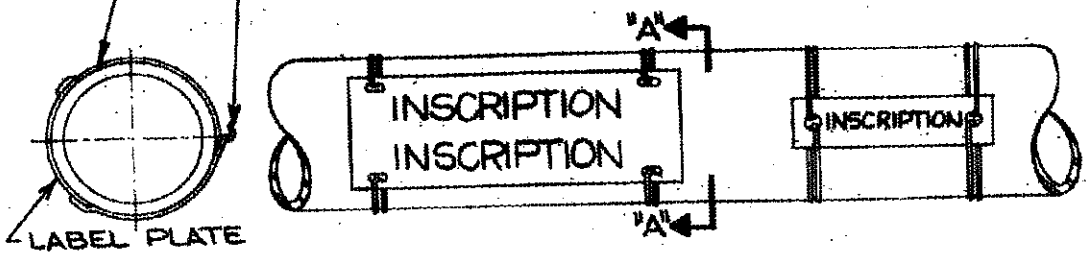

DETAIL "A-A"

FOR HORIZONTAL PIPE			
RECOMMENDED MAX PL LENGTH			
NOM IPS	MAX LG PLATE	NOM IPS	MAX LG PLATE
1/8"	—	2"	2-1/8"
1/4"	9/16"	2-1/2"	2-11/16"
3/8"	5/8"	3"	3-1/4"
1/2"	3/4"	3-1/2"	3-3/4"
3/4"	15/16"	4"	4-1/4"
1"	1-1/4"	5"	5-1/4"
1-1/4"	1-9/16"	6"	6-1/4"
1-1/2"	1-3/4"	—	—

NOTE:
THIS TYPE TO BE USED ONLY WHEN ABSOLUTELY NECESSARY

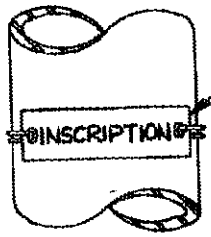

4 HOLE LABEL PLATE SIMILAR. SEE DETAIL "A-A" FOR SECURING LABEL PLATE.

FOR VERTICAL PIPE			
RECOMMENDED MAX PL LENGTH			
NOM IPS	MAX LG PLATE	NOM IPS	MAX LG PLATE
1/8"	—	2"	2-1/8"
1/4"	—	2-1/2"	2-11/16"
3/8"	—	3"	3-1/4"
1/2"	—	3-1/2"	3-3/4"
3/4"	—	4"	4-1/4"
1"	—	5"	5-1/4"
1-1/4"	—	6"	6-1/4"
1-1/2"	—	—	—

LABEL PLATE STANDARDS	HULL NO.	DRAWING NO.	SH NO.	REV
DETAIL OF LABEL WIRED TO PIPE	STD	605-4721371	30	A

4701271 SH 30

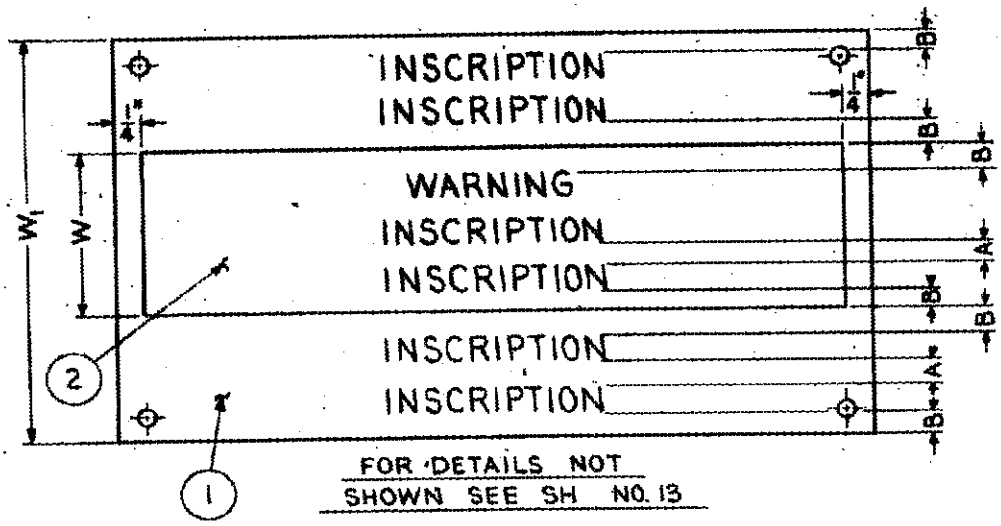

FOR DETAILS NOT SHOWN SEE SH NO. 13

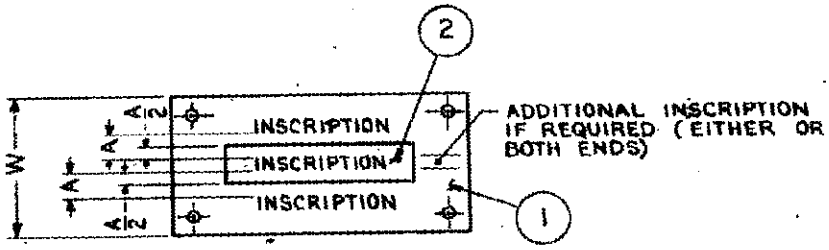

FOR DETAILS NOT SHOWN SEE SH NO. 13

1. MATERIAL FOR LABEL PLATES SHALL BE PHOTOSENSITIZED ALUMINUM. PLATE NO. 1 SHALL BE .032" THK AND SHALL HAVE BLACK LETTERS ON A NATURAL BACKGROUND. PLATE NO. 2 SHALL BE .012" THK AND SHALL HAVE BLACK LETTERS ON A RED BACKGROUND.

2. PLATE NO. 2 SHALL BE ATTACHED TO PLATE NO. 1 WITH 3M SCOTCH BRAND NO. 466 PRESSURE-SENSITIVE TAPE OR EQUAL.

3. THAT PART OF THE INSCRIPTION TO BE INSCRIBED ON PLATE NO. 2, WHEN WRITTEN IN THE INSCRIPTION COLUMN OF THE LABEL PLATE LIST, SHALL BE ENCLOSED WITHIN A RECTANGLE.

4. FOR WARNING, SAFETY, AND CAUTION LABEL PLATES SEE SH 32 AND NOTE NO. 1.20.

LABEL PLATE STANDARDS	HULL NO.	DRAWING NO.	SH NO.	REV
SPECIAL LABEL PLATES	STD	605-4721371	31	A

4721371 011 71

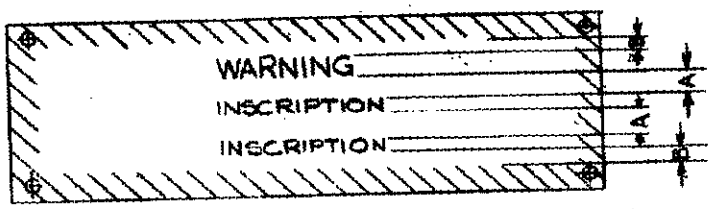

LABEL PLATE FOR WHITE & RED LIGHT AREAS

FOR DETAILS NOT SHOWN SEE SHEET 13

NOTES:

1. FOR ADDITIONAL INFORMATION WHEN ORDERING THESE PLATES, SEE GENERAL NOTE 1.20.

(A1) ~~2. ALL WARNING, SAFETY AND CAUTION LABEL PLATES LOCATED IN LOW LEVEL RED ILLUMINATION AREAS SHALL HAVE NATURAL LETTERS ON A BLACK BACKGROUND WITH A QUARTER INCH WIDE RED AND A NATURAL PHOTO SENSITIZED ALUMINUM DIAGONALLY STRIPED MARGIN AROUND THE BORDER OF THE PLATE AND BE .020" THICK.~~

(A1) ~~3. ALL WARNING, SAFETY AND CAUTION LABEL PLATES NOT LOCATED IN LOW LEVEL RED ILLUMINATION AREAS SHALL HAVE RED LETTERS ON A NATURAL BACKGROUD WITH A QUARTER INCH WIDE RED AND A NATURAL PHOTO SENSITIZED ALUMINUM DIAGONALLY STRIPED MARGIN AROUND THE BORDER OF THE PLATE AND BE .020" THICK.~~

4. IF HOLES ARE REQUIRED FOR MOUNTING, MAKE NOTATION IN THE APPLICABLE ORDERING DATA.

(A1) 5. ALL WARNING, SAFETY AND CAUTION LABEL PLATES SHALL HAVE A RED INSCRIPTION ON A BLACK BACKGROUND PER SECTION 602 OF THE GENERAL SPECIFICATIONS. A QUARTER-INCH WIDE RED AND BLACK DIAGONALLY STRIPED MARGIN SHALL BE PROVIDED AROUND THE BORDER OF THE PLATE AND BE .020" THICK.

LABEL PLATE STANDARDS	HULL NO.	DRAWING NO.	SH NO.	REV
WARNING SAFETY & CAUTION LABEL PLATES	STD	605-4721371	32	A

(A1)

LABELS THIS SHEET CAN BE USED ON VALVES LISTED ON SHEET 33A. FOR OTHER VALVE LABELS SEE SHEETS 13 & 35.

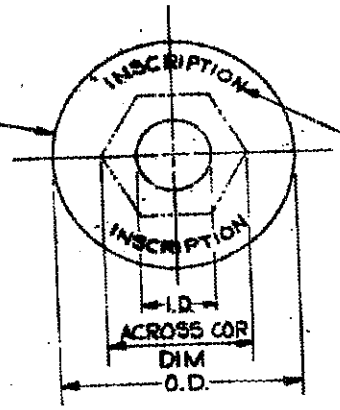

LETTERS TO BE 1/8" HIGH

DISCS								
				LETTERING				
					MAX NO. OF LETTERS			
					METAL PHOTO LABELS		ENGRAVED LABELS	
LABEL PLATE SIZE NO.	ACROSS COR DIM SEE NOTE 2	I.D.	O.D.	NO. OF LINES	REG (12R)	COND (14C)	REG	COND
1	7/16"	1/4"	7/8"	1	12	18	12	15
2	9/32"	3/16"	15/16"	1	14	18	14	15
3	11/32"	1/4"	1 1/16"	1	15	22	15	19
4	3/8"	1/4"	1 1/4"	2	32	50	32	44
5	1/2"	5/16"	15/16"	1	14	18	14	15
6	1/2"	5/16"	1 1/16"	1	15	22	15	19
7	5/8"	3/8"	1 1/4"	1	20	32	20	28
8	1/2"	5/16"	1 1/4"	1	20	32	20	28
9	3/4"	7/16"	1 7/16"	2	47	70	47	61
10	9/16"	3/8"	1 5/8"	2	49	77	49	67
11	7/8"	9/16"	1 3/4"	2	55	84	55	74
12	3/8"	1/4"	15/8"	3	61	95	61	84
13	3/4"	7/16"	2 1/8"	3	87	135	87	120
14	1"	9/16"	1 7/8"	2	60	96	60	84
15	1 1/8"	3/4"	2 1/2"	2	85	132	85	117
16	2 1/16"	1 7/16"	2 3/4"	1	56	89	56	79
17	2 1/2"	1 9/16"	3 1/4"	1	67	106	67	96
18	3"	2 1/16"	3 7/8"	1	78	126	78	112
19	4"	2 9/16"	4 7/8"	1	102	165	102	147

NOTES:

1. FOR MATERIAL, SEE GENERAL NOTE 1.3.
2. THIS DIM IS TO BE USED AS A BOUNDARY LINE BY DEPT MAKING LABEL IN ORDER THAT INSCRIPTION DOES NOT INFRINGE UPON AREA INSIDE OF LINE. THIS WILL PREVENT THE POSSIBILITY OF HANDWHEEL NUT COVERING UP PORTION OF INSCRIPTION.
3. METAL PHOTO SEA VALVE AND "FUEL" LABELS SHALL HAVE RED LETTERS ON A NATURAL BACKGROUND.
4. TYPE OF LETTERS USED SHALL BE DETERMINED BY DEPT MAKING LABEL TO SUIT THE INSCRIPTION.

LABEL PLATE STANDARDS	HULL NO.	DRAWING NO.	SH NO.	REV
STANDARD DISC TYPE LABEL PLATES FOR VALVES MOUNTED UNDER HANDWHEEL NUT	STD	605-4721371	33	A

4721371 SH 33

VALVE HANDWHEEL LABEL PLATE SIZE NUMBERS

VALVE DRAWING NO. OR MIL-SPEC. NO.	VALVE SIZE, IPS																															REMARKS
	1/4	3/8	1/2	3/4	1	1 1/4	1 1/2	2	2 1/2	3	3 1/2	4	4 1/2	5	5 1/2	6	6 1/2	7	7 1/2	8	8 1/2	9	9 1/2	10	11	12	13	14	15	16		
5000-54824-1385541	5	–	5	5	5	7	7	9	14	14	14	14	14	14	15	15	15	15	15	16	16	16	16	16	16	16	16	17	17	–		
5000-54824-1385623	–	–	–	–	–	–	–	–	11	11	15	15	15	16	–	16	–	16	–	16	–	16	–	17	–	–	–	–	–	–		
803-1385637	CHECK VALVES, LABEL PLATES NOT REQUIRED																															
810-1385707	–	–	–	–	–	–	–	7	–	7	–	11	–	11	–	–	–	–	–	–	–	–	–	–	–	–	–	–	–	–		DEVELOPED FROM DWG 4384536
810-1385711	–	–	–	–	–	–	7	–	–	–	–	–	–	–	–	–	–	–	–	–	–	–	–	–	–	–	–	–	–	–		
810-1385712	–	–	–	–	–	–	–	–	11	–	–	–	–	–	–	–	–	–	–	–	–	–	–	–	–	–	–	–	–	–		
810-1385714	1	1	5	7	9	9	11	14	–	–	–	–	–	–	–	–	–	–	–	–	–	–	–	–	–	–	–	–	–	–		
803-1385721	CHECK VALVES, LABEL PLATES NOT REQUIRED																															
810-1385741																																
810-1386744																																
810-1385965	–	–	*	*	*	–	–	–	–	–	–	–	–	–	–	–	–	–	–	–	–	–	–	–	–	–	–	–	–	–		LABEL NOT REQ'D ON LIFT CHECK VLVS
810-2177140	–	–	–	–	–	–	–	–	15	–	–	–	–	–	–	–	–	–	–	–	–	–	–	–	–	–	–	–	–	–		LABEL NOT REQ'D ON LIFT CHECK VLVS
810-2177141	–	–	–	–	–	–	–	–	–	15	–	15	–	–	–	–	–	–	–	–	–	–	–	–	–	–	–	–	–	–		
810-2177142	–	–	–	–	–	–	–	–	–	–	–	–	–	*	–	*	–	–	–	–	–	–	–	–	–	–	–	–	–	–		
810-2177518	–	–	–	–	–	–	–	–	–	–	–	–	–	19	–	–	–	–	–	–	–	–	–	–	–	–	–	–	–	–		LABEL NOT REQ'D ON LIFT CHECK VLVS
810-2177625	3	3	7	9	14	14	14	15	–	–	–	–	–	–	–	–	–	–	–	–	–	–	–	–	–	–	–	–	–	–		
803-2177917	–	–	–	–	–	–	–	–	16	16	–	16	–	17	–	17	–	–	–	17	–	–	–	19	–	19	–	–	–	–		
803-4384536	1	1	5	7	9	9	11	14	–	–	–	–	–	–	–	–	–	–	–	–	–	–	–	–	–	–	–	–	–	–		
803-5001003	*	*	*	*	*	*	*	*	*	–	–	–	–	–	–	–	–	–	–	–	–	–	–	–	–	–	–	–	–	–		
803-5001004	–	–	–	–	–	–	–	–	–	*	*	15	–	15	–	15	–	–	–	–	–	–	–	–	–	–	–	–	–	–		

* USE RECTANGULAR WIRE-ON LABEL PLATE SHEET 13 & 35

TABLE FOR SELECTION OF LABEL SIZE FOR USE ON VALVE HANDWHEELS

FOUO

SIZE	CODE IDENT. NO.	NAVSEA DRAWING NO.	
B	53711	STD 605-4721371	A
SCALE N.A.		SHEET 33A	

4721371 SH 33A

DIE SIZES AVAILABLE FOR METAL PHOTO LABELS					
1/16"	1/4"	5/8"	1 7/16"	2 1/8"	2 3/4"
5/64"	9/32"	11/16"	1 1/2"	2 5/16"	3"
3/32"	5/16"	13/16"	1 9/16"	2 1/4"	3 1/4"
1/8"	3/8"	15/16"	1 11/16"	2 3/8"	
5/32"	7/16"	1 1/16"	1 3/4"	2 7/16"	
3/16"	1/2"	1 3/16"	1 7/8"	2 1/2"	
7/32"	9/16"	1 5/16"	2 1/16"	2 5/8"	

NOTES:

1. THE ABOVE TABLE SHOWS DIE SIZES AVAILABLE FOR CUTTING METAL PHOTO LABEL PLATES. THE SIZES INCLUDE DIES FOR CUTTING THE FOLLOWING:
   (a) SCREW HOLES
   (b) INSIDE DIAMETERS
   (c) OUTSIDE DIAMETERS
2. CIRCULAR SIZES LARGER THAN 3 1/4" IN DIAMETER ARE CUT BY MEANS OF A CIRCULAR SHEET METAL CUTTING MACHINE.

LABEL PLATE STANDARDS	HULL NO.	DRAWING NO.	SH. NO.	REV
TABLE INDICATING DIE SIZES AVAILABLE FOR METAL PHOTO LABELS	STD	605-4721371	34	A

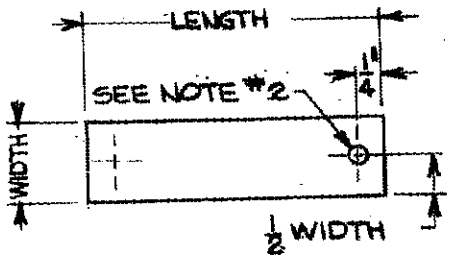

DETAIL FOR PLATES WITH A WIDTH OF 1-1/2" OR LESS

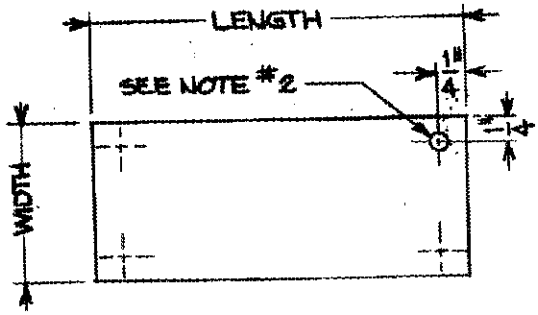

DETAIL FOR PLATES WITH A WIDTH OF OVER 1-1/2"

RECTANGULAR LABEL PLATES						
LENGTH	WIDTH	1/8" LETTERS, 1/8" SPACING BET. LINES				
		NO. OF LINES	MAX. NO. OF LTRS PER LINE			
			METAL PHOTO LABELS		ENGRAVED LABELS	
			REG	COND	REG	COND
3"	7/8"	3	17	26	17	22
3"	1-1/2"	5	↓	↓	↓	↓
3"	2-1/4"	8	↓	↓	↓	↓
4"	1-1/2"	5	25	38	25	33
4"	2-1/4"	7	↓	↓	↓	↓
4"	3-1/4"	10	↓	↓	↓	↓

NOTES:

1. FOR MATERIAL SEE GENERAL NOTE 1.3.
2. LABEL TO BE FURNISHED WITHOUT HOLES. IF DRILLED HOLES ARE REQUIRED FOR MOUNTING, DO AS FOLLOWS: DRILL TWO 5/32" DIAMETER HOLES FOR PLATES UP TO AND INCLUDING 1-1/2" WIDE; AND DRILL FOUR 5/32" DIAMETER HOLES FOR PLATES OVER 1-1/2" WIDE.
3. IF HOLES ARE REQUIRED FOR MOUNTING, MAKE NOTATION IN THE APPLICABLE ORDERING DATA.
4. TYPE OF LETTERS USED SHALL BE DETERMINED BY DEPT MAKING LABEL TO SUIT THE INSCRIPTION SHOWN IN THE ORDERING DATA.

LABEL PLATE STANDARDS	HULL NO.	DRAWING NO.	SH NO.	REV
RECT. PLATES FOR DAMAGE CONTROL VALVES HAVING LONG INSCRIPTIONS	STD	605-4721371	35	A

4721371 SH 35

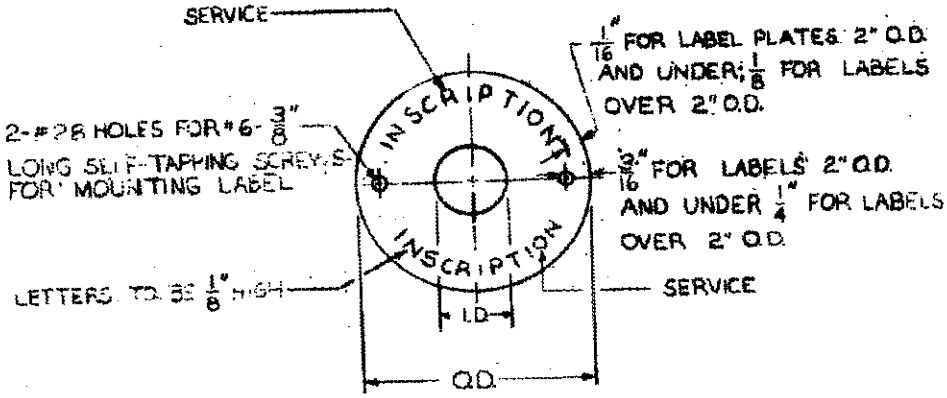

O.D.	I.D.	ROUND PLATE LETTERING MAX NO. OF LETTERS			
		METAL PHOTO LABELS		ENGRAVED LABELS	
		REG	COND	REG	COND
2"	1"	[illegible]	[illegible]	[illegible]	44
2 1/4"	1"	37	56	37	49
5"	3 1/16"	112	169	112	149

NOTES:
1. DRILL HOLES FOR ATTACHMENT SCREWS BEFORE MAKING LABEL.
2. METAL PHOTO SEALING LABEL AND "FUEL" LABELS SHALL HAVE RED LETTERS ON A NATURAL BACKGROUND.

LABEL PLATE STANDARDS ROUND PLATE FOR VALVE OPERATING GEAR	HULL NO.	DRAWING NO.	SH. NO.	REV
	STD	605-4721371	36	A

4721371_53711_-_A_0037_0001_G_N
December 6, 2000 12:44 AM

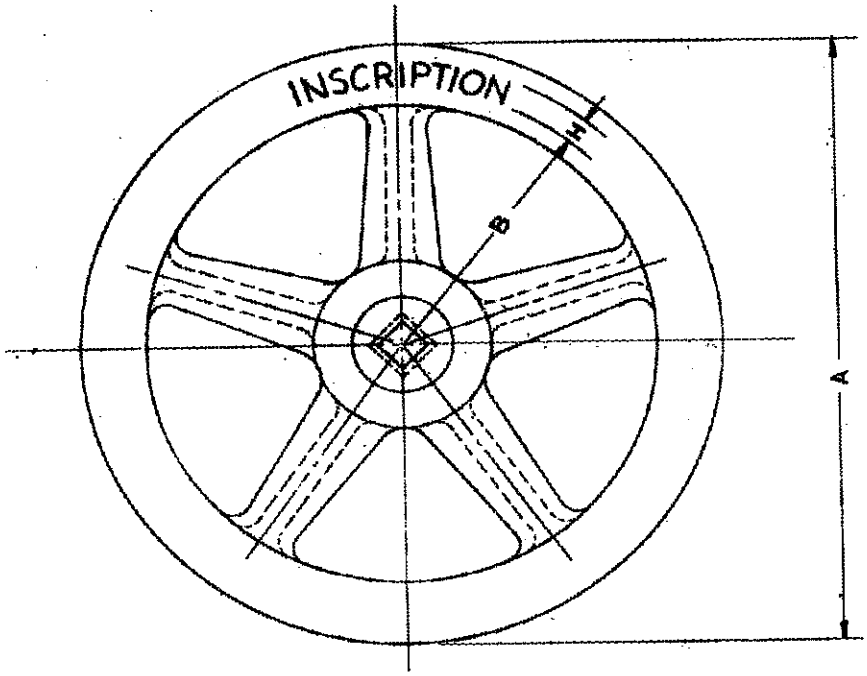

DIA A		3"	4"	5"	6"	7"	8"	9"	10"	11"	12"	14"	16"	18"	21"	24"	27"	30"	33"	36"	40"
H		1/4"	1/4"	1/4"	1/4"	5/16"	5/16"	5/16"	5/16"	3/8"	3/8"	3/8"	7/16"	7/16"	1/2"	1/2"	1/2"	5/8"	5/8"	5/8"	5/8"
B		1 5/32"	1 5/8"	2 3/32"	2 9/16"	3"	3 1/2"	3 15/16"	4 7/16"	4 7/8"	5 11/32"	6 15/16"	7 7/32"	8 7/32"	9 9/16"	11 1/16"	12 9/16"	13 15/16"	15 7/16"	16 15/16"	18 19/16"
MAX NO LTR	R	32	45	58	71	66	78	87	99	91	100	119	112	125	132	154	174	195	156	176	191
	C	50	70	93	113	88	98	110	122	146	160	190	149	166	168	196	220	194	212	240	258

NOTES:

1. HANDWHEELS TO BE ENGRAVED ABOUT 1/32 DEEP AND ON THE SURFACE FACING THE OPERATOR.
2. DAMAGE CONTROL NUMBER, IF REQUIRED, IS TO BE PART OF INSCRIPTION.
3. TYPE OF LETTERS USED SHALL BE DETERMINED BY ENGRAVING DEPARTMENT.

LABEL PLATE STANDARDS	HULL NO.	DRAWING NO.	SH NO.	REV
ENGRAVED HANDWHEELS	STD	605-4721371	37	A

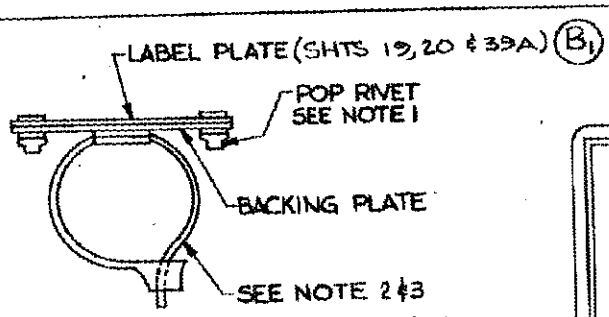

LABEL PLATE & STRAP ASSY

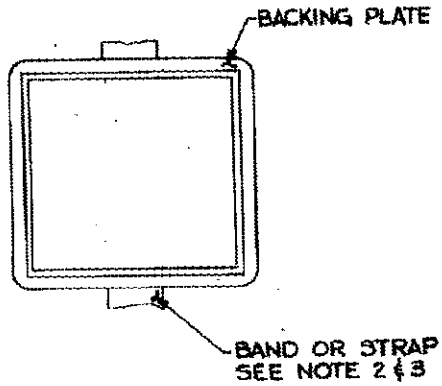

ASSY DETAIL

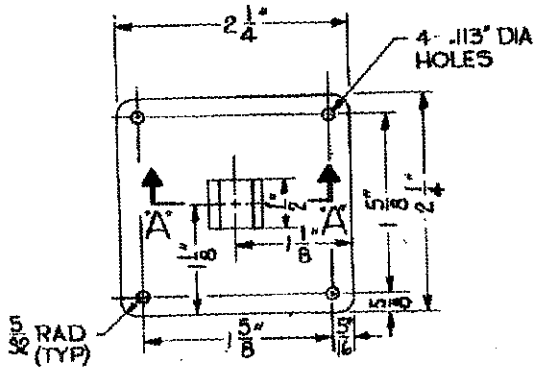

BACKING PLATE DETAIL 38

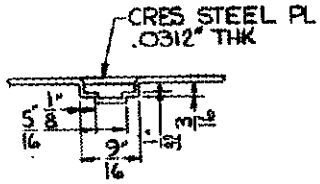

SECTION "A"-"A"

NOTES:

(B1) 1. LABELS ON SHTS. 19, 20 & 39A ARE TO BE ATTACHED TO BACKING PLATES IN ACCORDANCE WITH DETAIL 38 ON THIS SHEET AND DETAILS 39 & 39A ON SHEET 39, WITH 7/64" MONEL POP RIVETS LOCATED IN DIAGONAL CORNERS .020 - .070 GRIP.

2. LABEL PLATE ASSEMBLIES ARE TO BE ATTACHED TO PIPE AND ON VALVES USING NYLON STRAPS OR CRES BANDS. FOR INTERIOR APPLICATION USE WHITE NYLON, FOR EXTERIOR APPLICATION USE CRES BANDS AND BUCKLES.

3. IF THE CONDITION EXISTS WHERE IT IS NOT FEASIBLE TO USE THE NYLON STRAPS LISTED IN NOTE 2 ABOVE STAINLESS STEEL BANDS AND BUCKLES ARE TO BE USED SEE NOTE 4 BELOW.

4. NYLON STRAPS CAN NOT BE USED IN THE FOLLOWING APPLICATIONS:

A. ON ANY PIPING WHERE THE TEMPERATURE EXCEEDS 185°F.
B. ON ANY PIPING IN COMPARTMENTS UNDER THE COGNIZANCE OF THE REACTOR CONTROL OFFICER (I.E. FEED CONTROL ROOM, REACTOR AUX ROOM, COOLANT TURBO GEN RM. AND REACTOR COMPT.)

(B1) 5. WHEN USING THIS METHOD OF ATTACHMENT ON 1/2 IPS PIPING & SMALLER, FILLER HOSE AS SHOWN IN SKETCH "39-B" SH 39 IS TO BE USED. HOSE IS TO BE SIMILAR TO CLEVELAND RUBBER & PLASTIC CO., PART NO. 1502 & 1825 OR EQUAL & IS TO BE FURNISHED BY INSTALLING SHOP. HOSE IS TO BE CUT TO A MINIMUM LENGTH OF 1" & SHALL BE APPROX 1/8" THK.

LABEL PLATE STANDARDS	HULL NO.	DRAWING NO.	SH NO.	REV
STRAPS & BACKING PLATES FOR STRAPPING LABEL PLATES ON PIPES OR VALVES	STD	605-4721371	38	B

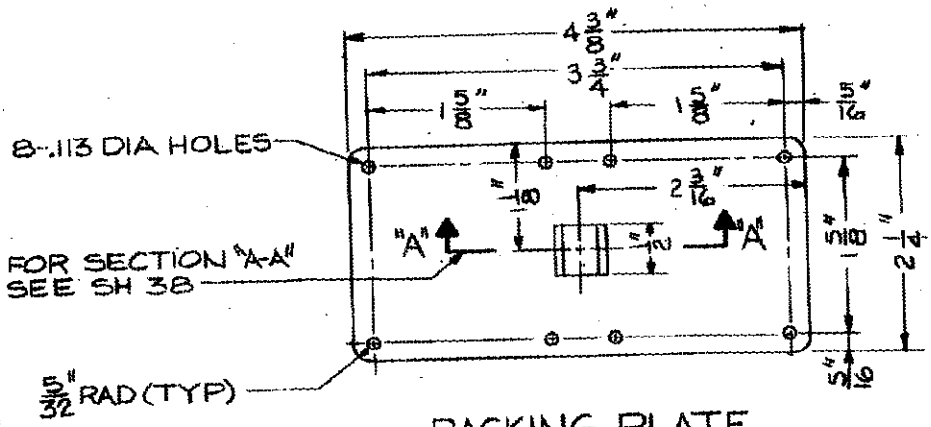

BACKING PLATE
DETAIL "39" & "39-A"

DETAIL 39 IS AS SHOWN DET 39-A
RE-ORIENTATE STRAP GROOVE
90° FROM THAT NOW SHOWN

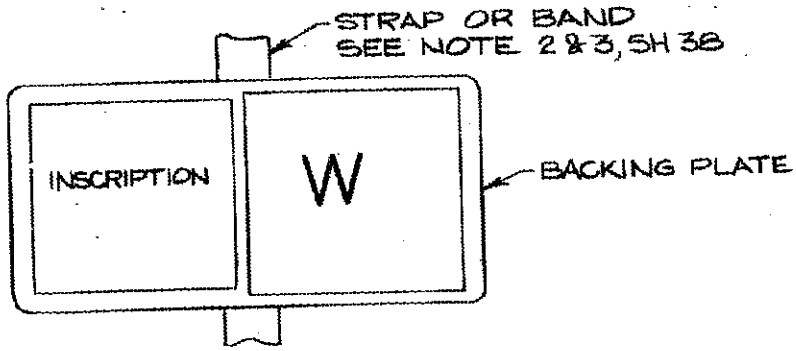

ASSY DETAIL

NOTE:

(B1) 1. FOR GENERAL NOTES AND ADDITIONAL SKETCHES SEE SHEETS 38 AND 39A.

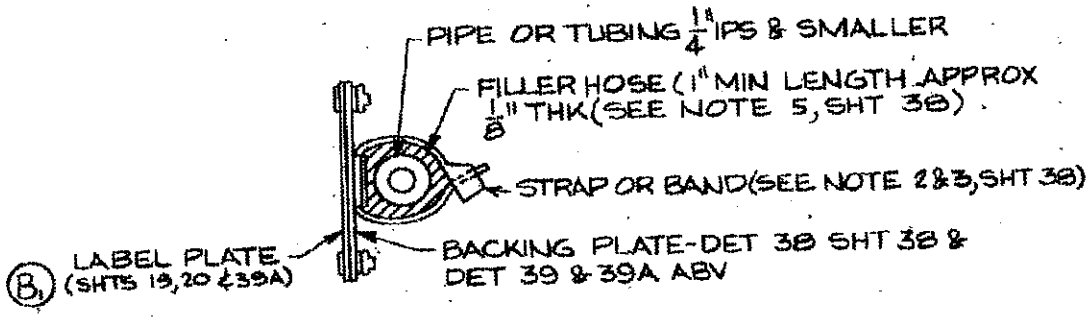

LABEL PLATE STANDARDS	HULL NO.	DRAWING NO.	SH NO.	REV
STRAPS & BACKING PLATE FOR STRAPPING LABEL PLATES ON PIPES OR VALVES	STD.	605-4721371	39	B

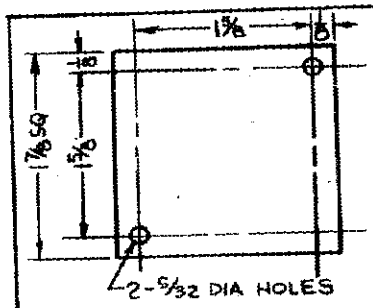

LABEL DETAIL

SQUARE LABEL PLATES								
3/16 SPACING BETWEEN LINES (TYPICAL)								REMARKS
MATL	THK	NO. LINES		MAX LTRS. PER LINE				
		1/8 LTR	3/16 LTR	REGULAR		CONDENSED		
				14R	18R	14C	18C	
ALUM	.02	9	6	15	10	20	14	
CRES	.05	7	6	15	10	17	14	

NOTES:

1. SEE GENERAL NOTE 1.3 FOR MATERIAL SPECS.
2. FOR ATTACHMENT TO BACKING PLATES, SEE SHTS. 38, 39 AND 41.
3. METAL PHOTO SEA VALVE AND "FUEL" LABELS SHALL HAVE RED LETTERS ON A NATURAL BACKGROUND.
4. TYPE OF LETTERS USED SHALL BE CALLED OUT ON THE APPROPRIATE LABEL LIST ON THE WORKING DRAWING.

B1

LABEL PLATE STANDARDS	HULL NO.	DRAWING NO.	SH NO	REV
SQUARE LABEL DETAILS	STD	605-4721371	39A	B

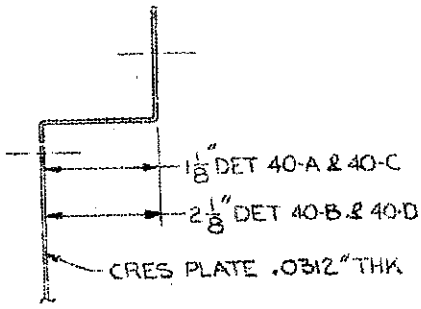

SECTION A-A

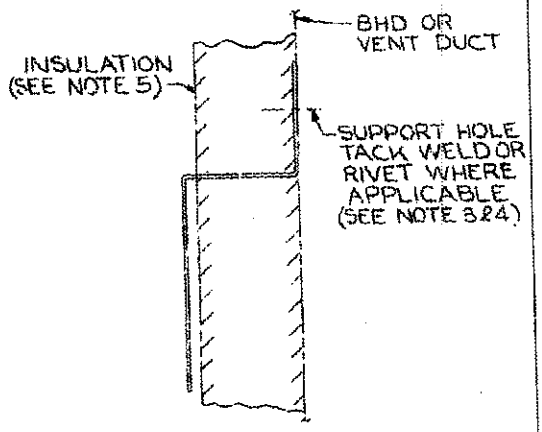

SKETCH 40-E
SHOWING TYPICAL INSTALLATION

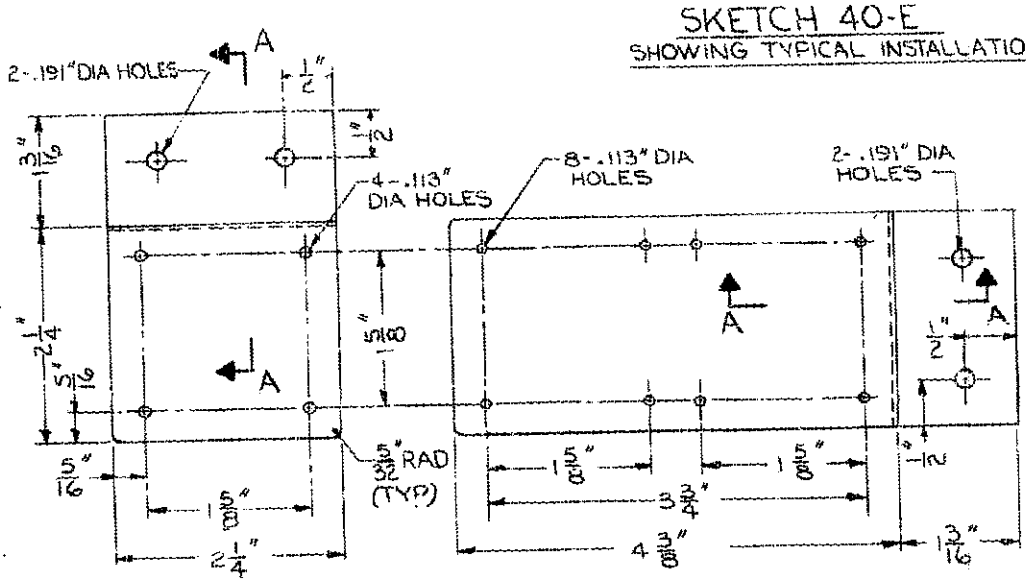

DETAIL 40A & 40B

DETAIL 40C & 40D

BACKING PLATES

FOR DETAIL, ASSEMBLY & NOTES SEE SHEET 41

LABEL PLATE STANDARDS	HULL NO.	DRAWING NO.	SH NO.	REV
BACKING PLATES FOR RIVETING OR TACK WELDING TO INSUL VENT DUCTS OR BHD	STD	605-4721371	40	A

4721371 SH 40

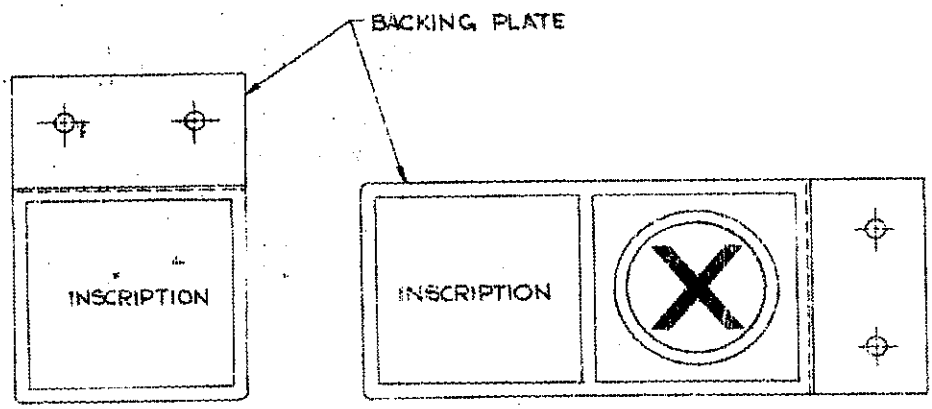

ASSEMBLY DETAIL

NOTES:

B1 1. LABELS ON SH 19,20 & 39A ARE TO BE ATTACHED TO BACKING PLATES IN ACCORDANCE WITH DETAIL 40A, 40B, 40C & 40D ON SH 40 WITH (2) 7/64" MONEL POP RIVETS LOCATED IN DIAGONAL CORNERS, .020"-.070" GRIP.

2. LABEL PLATE ASSEMBLIES 40A, 40B, 40C & 40D ARE TO BE USED WHEN ATTACHING LABELS TO INSULATED VENT DUCTS & BULKHEADS.

3. WHEN ATTACHING LABEL PLATE ASSEMBLIES TO NT INSULATED DUCTS 3/16" ALUMINUM POP RIVETS .092"-.128" GRIP SHALL BE USED.

4. WHEN ATTACHING LABEL PLATE ASSEMBLIES TO STEEL WT INSULATED DUCTS & BULKHEADS TACK WELD EXISTING SUPPORT HOLES.

5. WHEN ATTACHING LABEL PLATE ASSEMBLIES AFTER INSULATION HAS BEEN INSTALLED THE INSULATION IS TO BE CUT TO SUIT THEN GLUED BACK IN PLACE.

LABEL PLATE STANDARDS	HULL NO.	DRAWING NO.	SH NO.	REV
BACKING PL FOR RIVETING OF TACKS	KS TN	605-4721371	41	B

4721371 SH 41