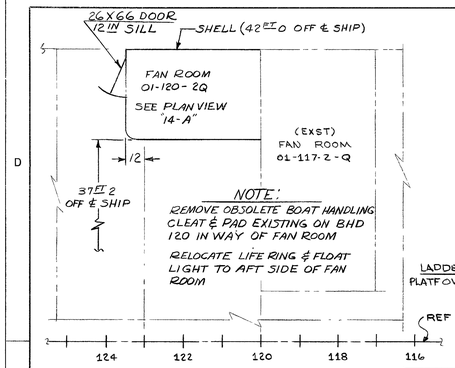

KEY PLAN "5-D" 01 LEVEL
SCALE: 3/8" = 1 FT-0 IN

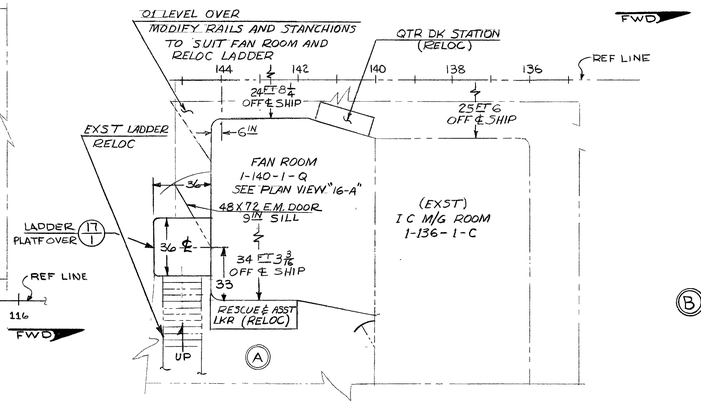

KEY PLAN "4-D" MAIN DECK
SCALE: 3/8" = 1 FT 0
(B)

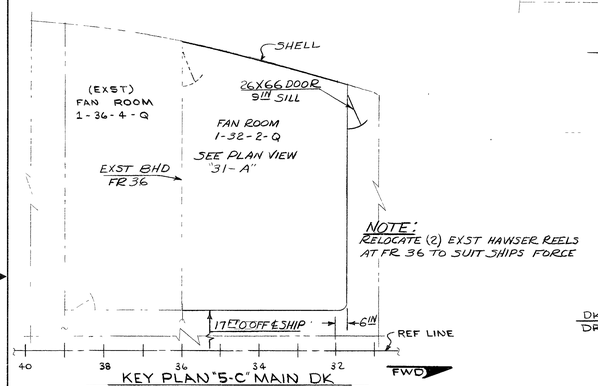

KEY PLAN "5-C" MAIN DK
SCALE: 3/8" = 1 FT-0 IN

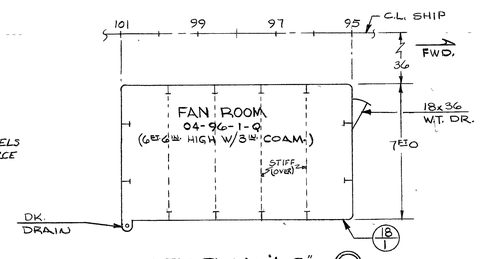

KEY PLAN "4-B"
04 LEVEL
SCALE: 3/8" = 1 FT 0
(B)

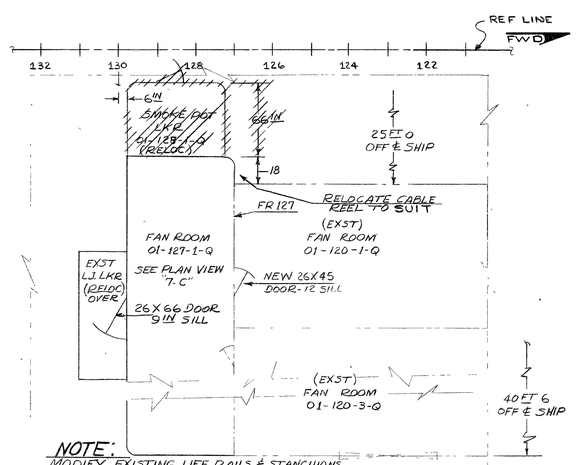

KEY PLAN "5-A" 01 LEVEL
SCALE: 3/8" = 1 FT-0 IN
(B)

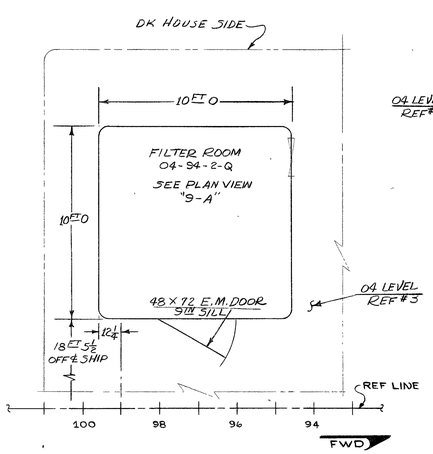

KEY PLAN "4-A" 04 LEVEL
SCALE: 3/8" = 1 FT- 0 IN

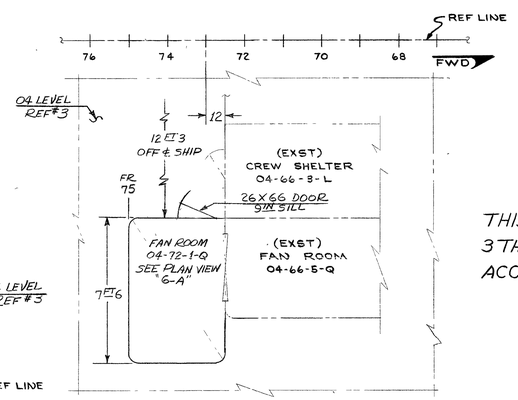

KEY PLAN "3-A" 04 LEVEL
SCALE: 3/8" = 1 FT- 0 IN

LIST OF MATERIAL

(QUANTITIES FOR ONE SHIP)

PC NO	QTY	LAST NO USED	DESCRIPTION	MAT'L	MAT'L SPEC	REMARKS
1	123	59	7.65 # PLT	MS-TY1-CL.A	MIL-S-22698	C/F SHOP STORES
2	7	6	10.2 # PLT	↓	↓	
3	67	43	4 X 2.28 X 3.25 # T	MS-TY.A-GR.M	MIL-S-20166	
4	23	20	5 X 2.69 X 4.5 # T	↓	↓	
5	13	5	5 X 1/2 F B			
6	3	3	3 X 1/2 F B			
7	5	2	2 X 2 5/8 X 3.8 # T - C/F 4 X 2 5/8 X 7.5 # I			
8	9	7	3 X 2 5/8 T - C/F 3 X 2 5/8 X 5.7 # I			
9	10	1	20.4 # PLT	MS-TY.1-CL.A		
10	2	1	GASKET - 1/4 THICK	RUBBER	MIL-R-900	
11	AS REQD	1	BOLTS 3/8 DIA HEX HD W/NUTS & WASHERS	STEEL	MIL-S-933-TY.A	
12	2	2	10 # PLT	STS	MIL-S-20154	
13	1	1	26X45 DOOR	STEEL		REF # 19
14	4	1	26X66 DOOR	↓		REF # 18
15	2	1	48X72 E.M. DOOR			TYPE "D" DETAIL "27-A" REF # 20
16	4	1	3/8 DIA ROD	STEEL	MIL-S-20166	
17	1	1	LADDER PLATFORM	MS	—	SEE GEN. NOTE # 10
18	1	1	DECK HOUSE	↓	—	↓
19						
20						
21						
22						
23						
24						

(B)

GENERAL NOTES

1. ALL WORK TO SHIPS STRUCTURE SHALL BE IN ACCORDANCE WITH NAVSHIPS 0900-000-1000.
2. SEE REFERENCES 1 & 2 FOR ARRANGEMENT OF EQUIPMENT IN NEW DECK HOUSES.
3. ALL DECKS HAVE CAMBER AND SHEER EXCEPT AS NOTED.
4. ALL NEW FAN ROOMS TO BE BUILT TO HEIGHTS INDICATED AND HAVE THE SAME CAMBER AND SHEER AS EXISTING ON SHIP EXCEPT AS NOTED.
5. ALL BULKHEAD VENT CUTS REFERRING TO THIS NOTE TO BE INSTALLED AS NOTED IN PANEL "6-D".
6. PLATE BUTTS MAY BE LOCATED TO FACILITATE FABRICATION.
7. FOR MISC. DECK AND BHD. MODS IN EXISTING AREAS OF SHIP SEE SHEET NO. 6.
8. ALL BURRS AND SHARP EDGES TO BE GROUND SMOOTH TO PREVENT INJURY TO PERSONNEL OR EQUIPMENT.
9. THE ORIGIN OF A VIEW IS INDICATED BY NUMBERS AND LETTERS IN PARENTHESES ( ) BELOW THAT VIEW.
10. PC. NO. 17 TO BE FABRICATED SIM. TO THAT INSTALLED ON 02 LEVEL, FR. 120-121, STBD. PC. NO. 18 (7.65# PL. & 5x2.69x4.5# T) TO BE FABRICATED SIM. TO DETS OF OTHER DK. HSES ON THIS DWG. (B)

THIS DRAWING MODIFIES REFERENCES 3 THROUGH 8; 10; 13; 17 AND 21 UPON ACCOMPLISHMENT OF SHIPALT LPD 278.

REVISIONS

REV.	DESCRIPTION	DATE	BY	APP'D
A	ADDED: WEIGHT AND MOMENT DATA IN KEY PLAN 4-D REF TO PLAN VIEW 5A CHANGED RA	1/20/73	DLW	[illegible] ACTG
B	AUTH: S/A LPD 278 ADDED: NEW DK. HSE IN KEY PLAN 4-B; PC. NOS. 17 & 18 IN L/M & GEN. NOTE # 10 MODIFIED: KEY PLAN "4-D" BY ADDING LADDER PLATF. & RELOCATING LADDER; KEY PLAN "5-A" & PLAN "7-C" BY DELETING "RELOCATED SMOKE POT LOCKER". THE ABOVE IS FOR RECORD ONLY & INCORPORATES NORFOLKS DLI'S 6269, 6418 & 6464.	6/23/72	J. E. K.	[illegible]

21	DK HOUSE SIDES & TRANSV BHDS FRS 84, 96 & 101 03 TO 04 LEVEL	LPD3-111A-1777228
20	E M BHDS	GT-51105-127275
19	DOOR WT 26 X 45	805-1400071
18	DOOR WT 26X66	805-1400066
17	MISC BHDS ON 03 LEVEL	LPD3-111A-1777224
16	STRUCTURAL DETAILS & NOTES	LPD1-145A-1773243
15	SHIELDS FOR 3"/50 CAL GUNS FRS 91-165 INCL	LPD1-111A-1773269
14	OUTSIDE PLATING FWD FR 91 ABV MN DK	LPD1-100A-1773227
13	MN DK HOUSE FRONT & END FRS 36 & 136	LPD1-111A-1773261
12	MN DK PLTG FR 91-165	LPD3-107A-1777810
11	MAIN DECK PLATING FWD OF FR 91	LPD3-107A-1777811
10	MISC BHDS & TRUNKS ON MAIN DECK	LPD1-111-1773253
9	OUTSIDE PLATING MN DK TO 02 LEVEL FRS 91-150	LPD1-100A-1773672
8	TRANSV DECK HOUSE BHDS MAIN DECK TO 02 LEVEL FR 108 & 120	LPD1-111A-1773262
7	MISC STRUCT BHDS ON 01 LEVEL & FLY STATION 02-03 LEVELS	LPD3-111A-1777235
6	DECK HOUSE STRUCTURE ABOVE 04 LEVEL	LPD3-111A-1777225
5	02 LEVEL PLATING	LPD3-111A-1777217
4	01 LEVEL PLATING	LPD3-111A-1777216
3	04 LEVEL PLATING & BEAMS	LPD3-111A-1777219
2	VENT & A/C MOD 02 LVL & ABOVE	LPD3-501-4397153
1	VENT & A/C MOD MN DK & 01 LEVEL	LPD3-501-4397154
NO.	TITLE	DRAWING NO.

REFERENCES

REV	REM	WT. GRP	WT. (LBS)	VCG ABV MLD ℄ (FT)	VERTICAL MOM (FT LBS)	LCG ABT ℄ (FT)	LONG MOM (FT LBS)	FWD (F) AFT (A)	TCG ABT ℄ (FT)	TRANS MOM (FT LBS)	PORT (P) STBD (S)	VAL BY
B	REM	111	1500	76.0	114000	7.0	10500	(A)	20.5	30750	(S)	[illegible]
B	ADD	111	2850	89.5	255150	49.1	139875	(F)	7.8	22215	(S)	[illegible]
A	ADDED	111	15579	66.9	1048305	57.3	851398	(F)	.8	13234	(P)	[illegible]

WEIGHT CONTROL DATA

AUTH: S/A LPD - 278

LPD 3

VESSELS ID. NO.

CHARLESTON NAVAL SHIPYARD
CHARLESTON, S. C.

NEW & MODIFIED FAN ROOMS
FOR AIRCOND INSTALLATION
ARRG'T & DETS

CHIEF DESIGN ENGINEER — 1-18-72
ASST. CHIEF DESIGN-ENGINEER — 1-18-72
BRANCH SUPERVISOR — 1-18-72
REVIEWED BY — PROJECT ENGR
DRAWN BY: MJ FOLLAK — DESIGNED BY

SIZE	CODE IDENT NO.	NAVSHIPS DRAWING NO.		REV
H	80090	111	4397294	B

SCALE: AS NOTED — SHEET 1 OF 8

~~CAT. ISSUE~~

TOTAL - N48.5.52

REV	DATE	BY
B	4	4
A	NOT	REQD
—	EE	12-9-71

SHIPCHECK

SHEET NO.

REVISION STATUS OF SHEETS

MICROFILMED		
REV	DATE	INITIAL
B	7/24/73	[illegible]

6N11-DNSY-U-1012-17

KAE 10153 8-71 2871

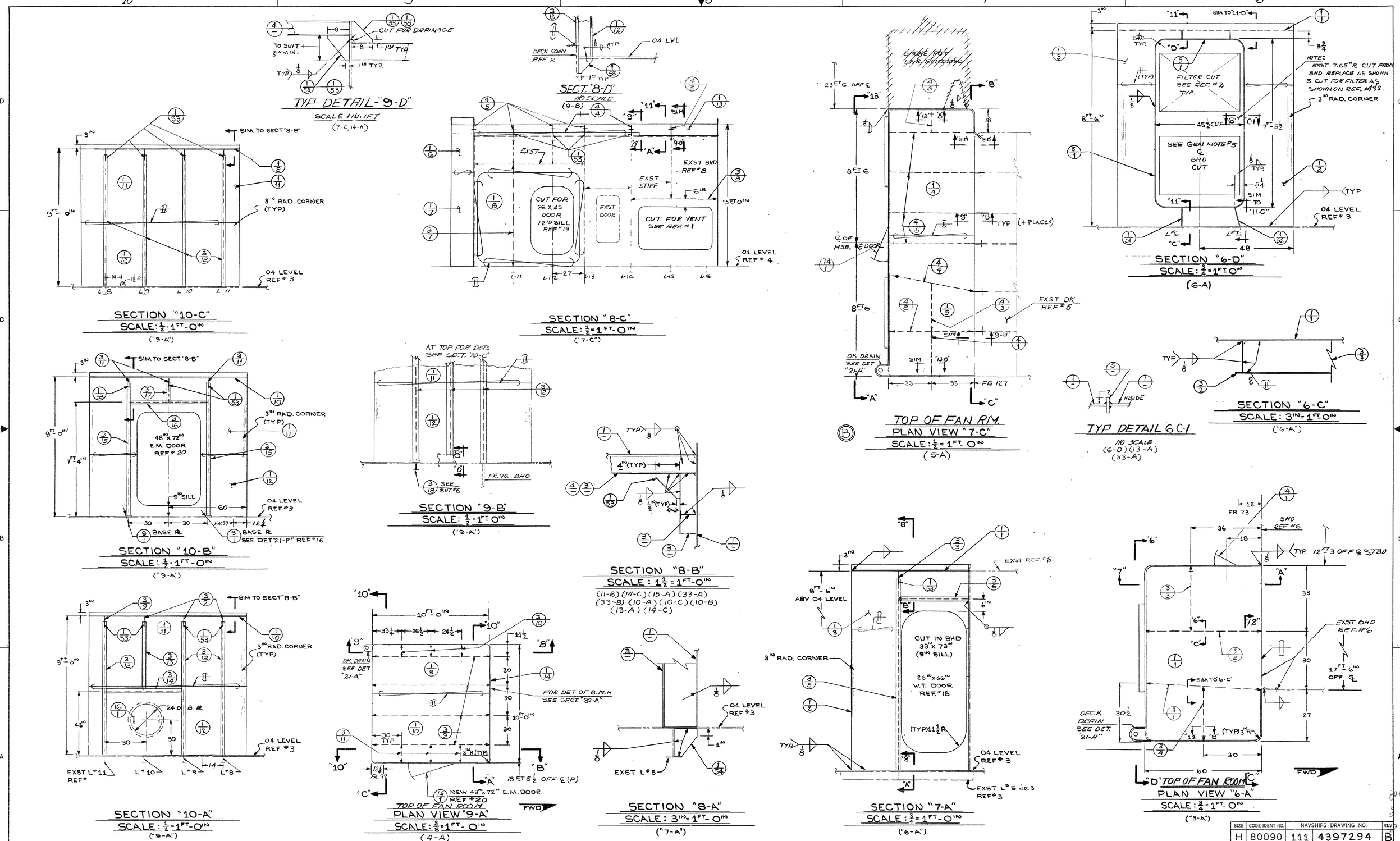

SIZE	CODE IDENT NO.	NAVSHIPS DRAWING NO.		REV
H	80090	111	4397294	B
SCALE: AS SHOWN		SHEET 2	OF	

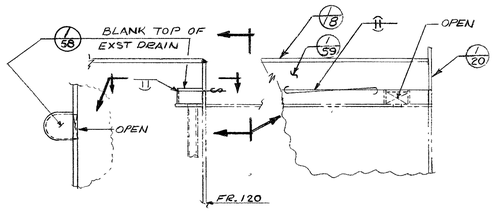

SECTION "15-D"
SCALE 1IN:1FT
(14-A)

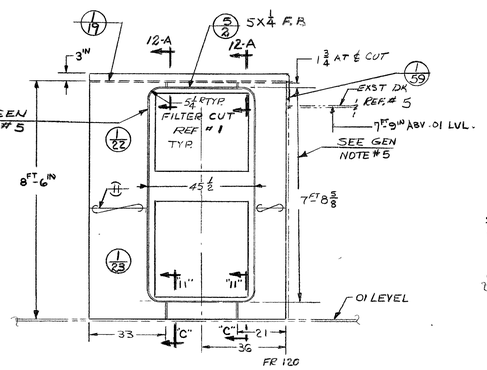

SECTION "15-B"
SCALE $\frac{1}{2}$ IN:1FT
(14-A)

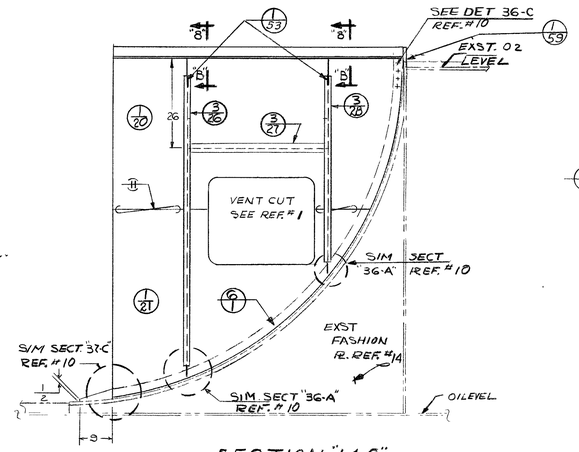

SECTION "14-C"
SCALE $\frac{3}{4}$ IN=1FT-0IN
(14-A)

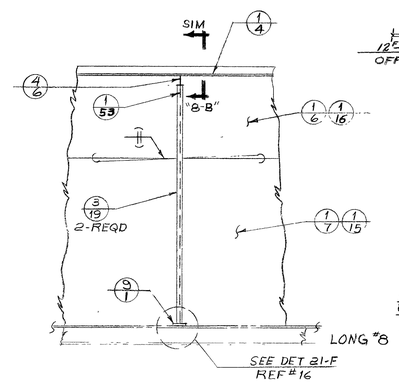

SECTION "13-B"
SCALE $\frac{1}{2}$IN=1FT-0
(7-C)

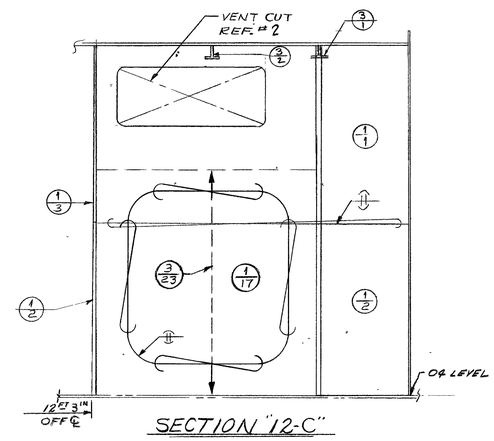

SECTION "12-C"
LHG. FWD
(6-A)

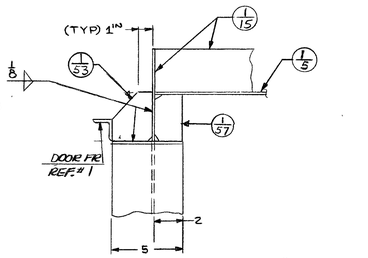

SECTION "12-B"
SCALE: 3IN=1FT-0IN
(13-A)

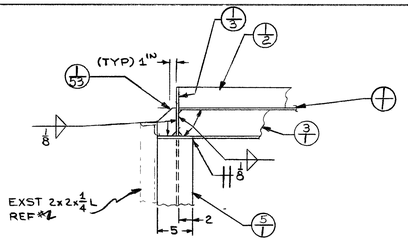

SECTION "11-D"
SCALE: $1\frac{1}{2}$=1FT-0IN
("6-D")

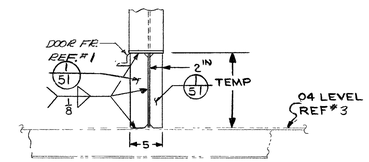

SECTION "11-C"
SCALE: $1\frac{1}{2}$=1FT-0IN
("6-D")(13-A)
(33-A)(34-A)

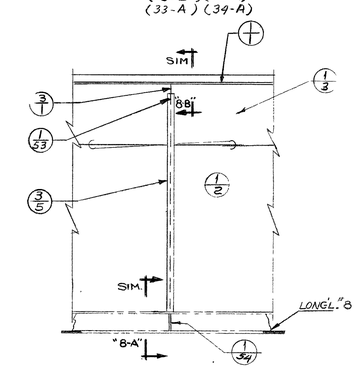

SECTION "11-B"
SCALE: $\frac{1}{2}$=1FT-0IN
("6-A")

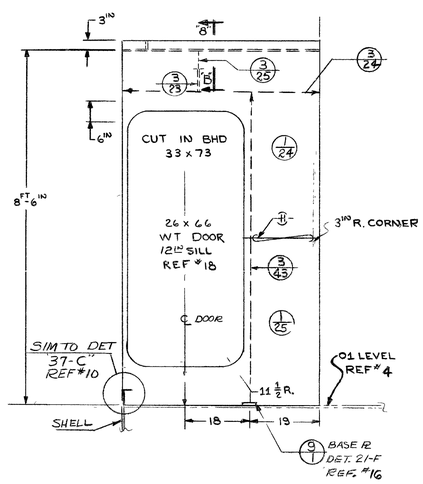

SECTION "15-A"
SCALE: $\frac{3}{4}$=1FT-0IN
(14-A)

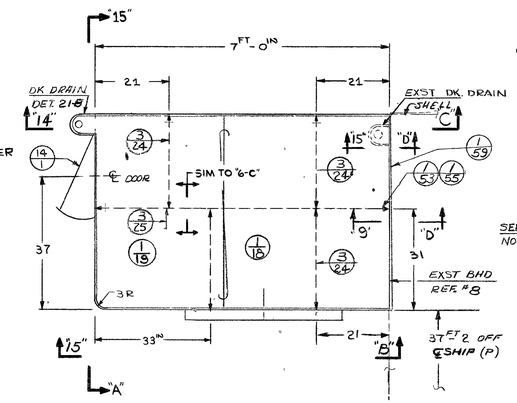

TOP OF FAN ROOM
PLAN VIEW "14-A"
SCALE: $\frac{3}{4}$=1FT-0IN
(5-B)

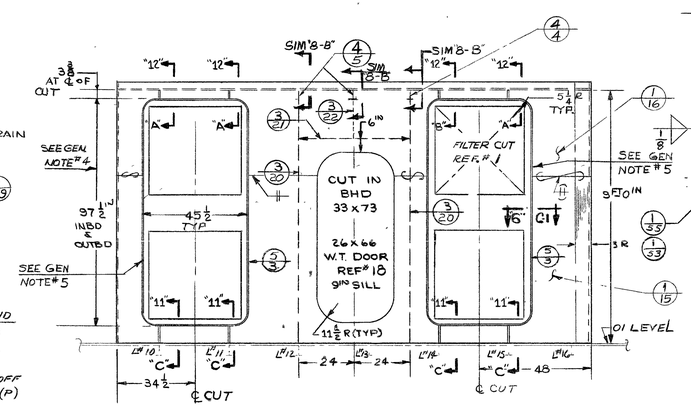

SECTION "13-A"
SCALE: $\frac{1}{2}$=1FT-0IN
("7-C")

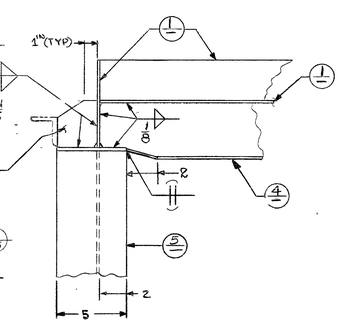

SECTION "12-A"
SCALE: 3IN=1FT-0IN
("13-A")
(15-B)
(33-A)
(34-A)

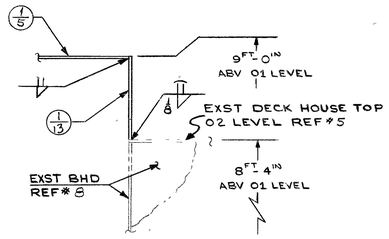

SECT "11-A"
SCALE: $1\frac{1}{2}$=1FT-0IN
("8-C")

SIZE	CODE IDENT NO.	NAVSHIPS DRAWING NO.		REV
H	80090	111	4397294	-
SCALE: AS SHOWN		SHEET 3	OF	

15 14 13 12 11

BND-CNSYD-11012-16

CAROLINA E & F

E&E 19153 8-71 (187)

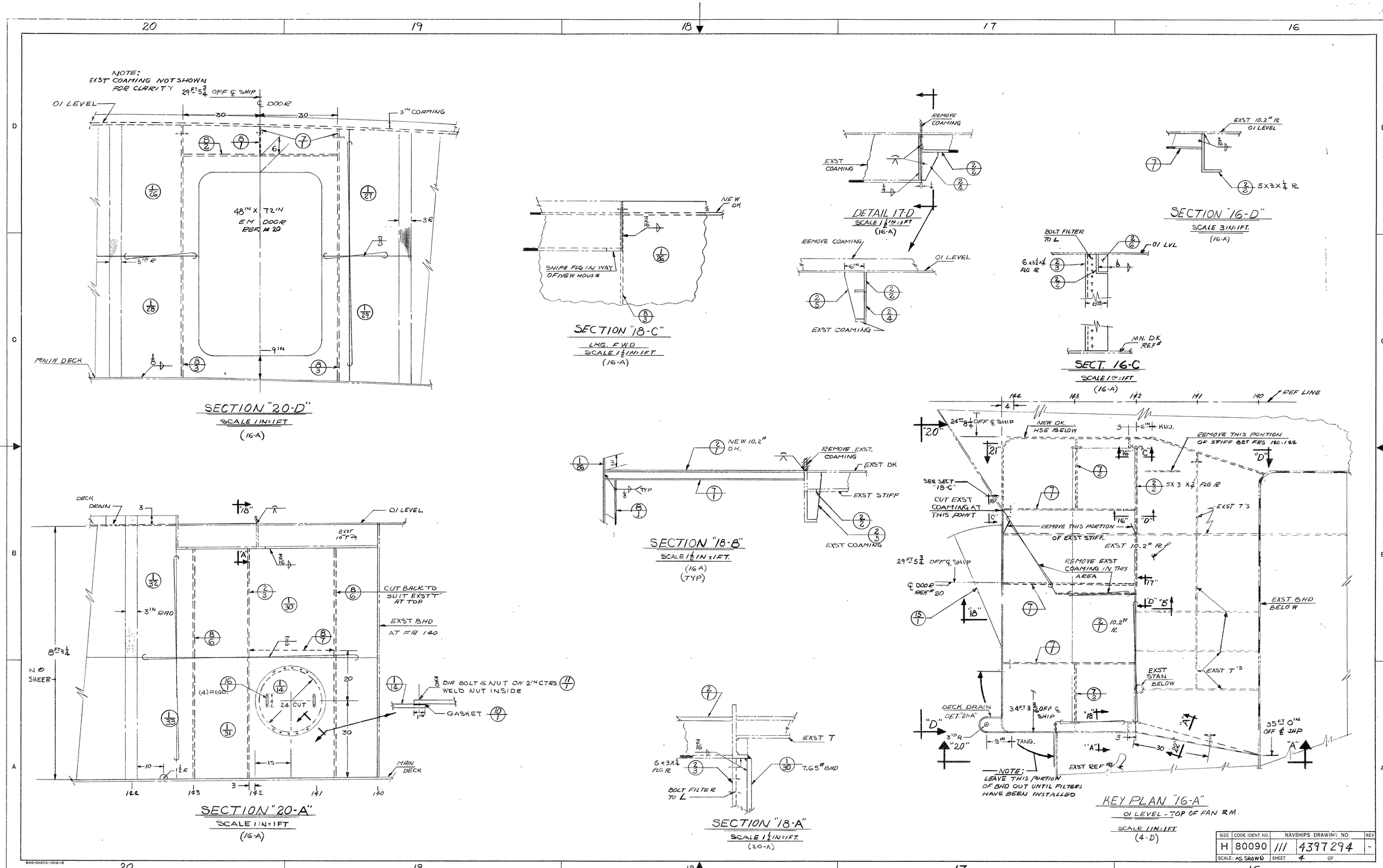

SIZE	CODE IDENT NO.	NAVSHIPS DRAWING NO.		REV
H	80090	111	4397294	-
SCALE: AS SHOWN		SHEET 4	OF	

6NO-ONSYD-11012-16

CAROLINA E & F

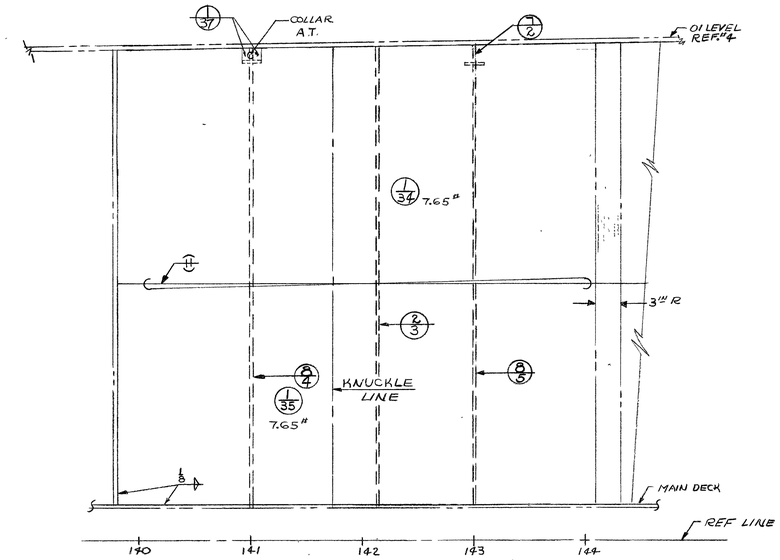

SECTION "21-D"
SCALE 1½ IN=1FT
(16-A)

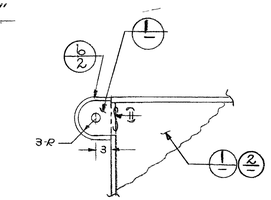

NOTE:
THIS DETAIL FOR DECK HOUSES WITH 90° CORNERS.

DETAIL-"21-B"
SCALE 1½ IN=1FT
(14-A)

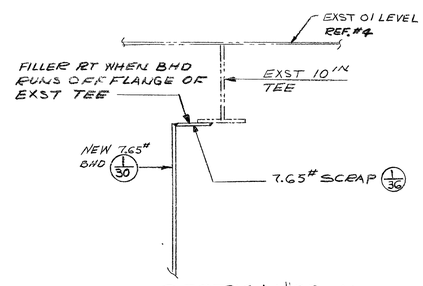

SECTION "22-A"
NO SCALE

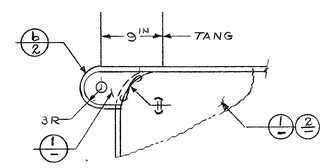

DETAIL "21-A"
SCALE 1½ IN=1FT.
(16-A)

NOTE:
THIS DETAIL FOR DECK HOUSES WITH A RADIUS

SIZE	CODE IDENT NO.	NAVSHIPS DRAWING NO.		REV
H	80090	111	4397294	-
SCALE: AS SHOWN		SHEET 5	OF	

6ND-CNSYD-11012-16

CAROLINA E & F

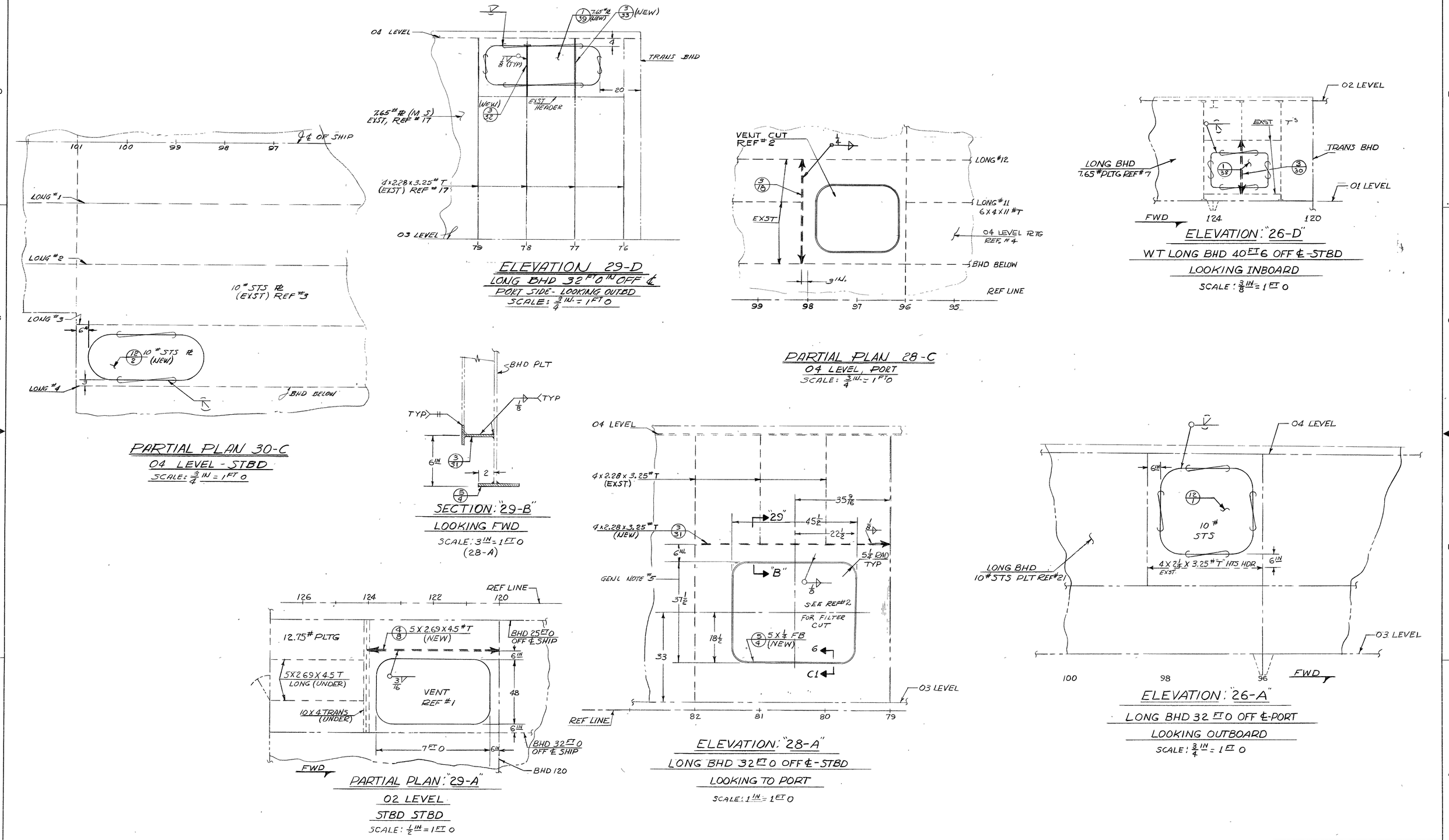

SIZE	CODE IDENT NO.	NAVSHIPS DRAWING NO.		REV
H	80090	111	4397294	–
SCALE.		SHEET 6	OF	

6ND-ONSYD-11012-16

CAROLINA E & F

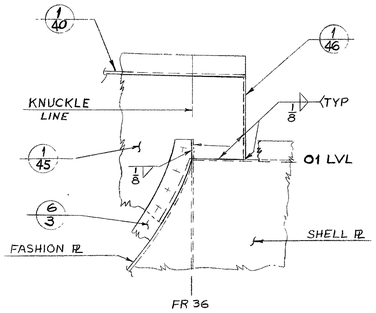

SECTION "35-D"
LKG INBD
SCALE: 1½" = 1 FT 0
(31-A)

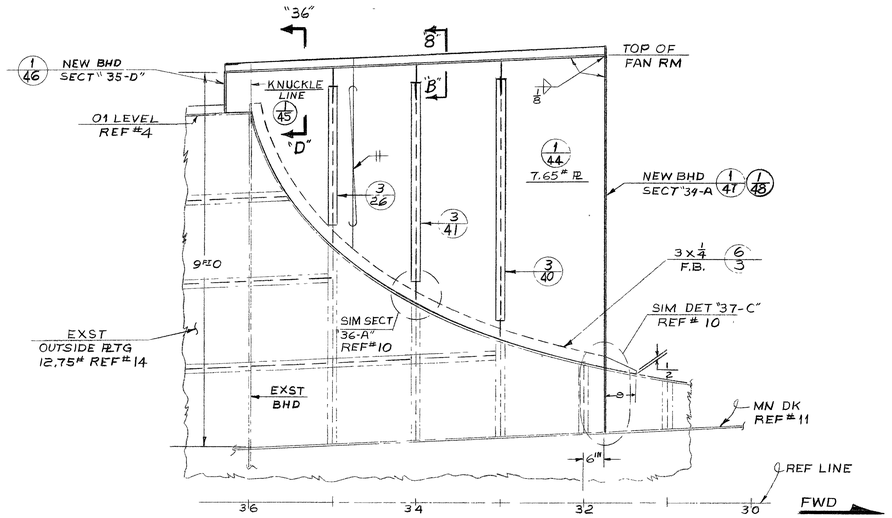

SECTION "33-C"
PORT LKG OUTBD
SCALE: ¾" = 1 FT 0
(31-A)

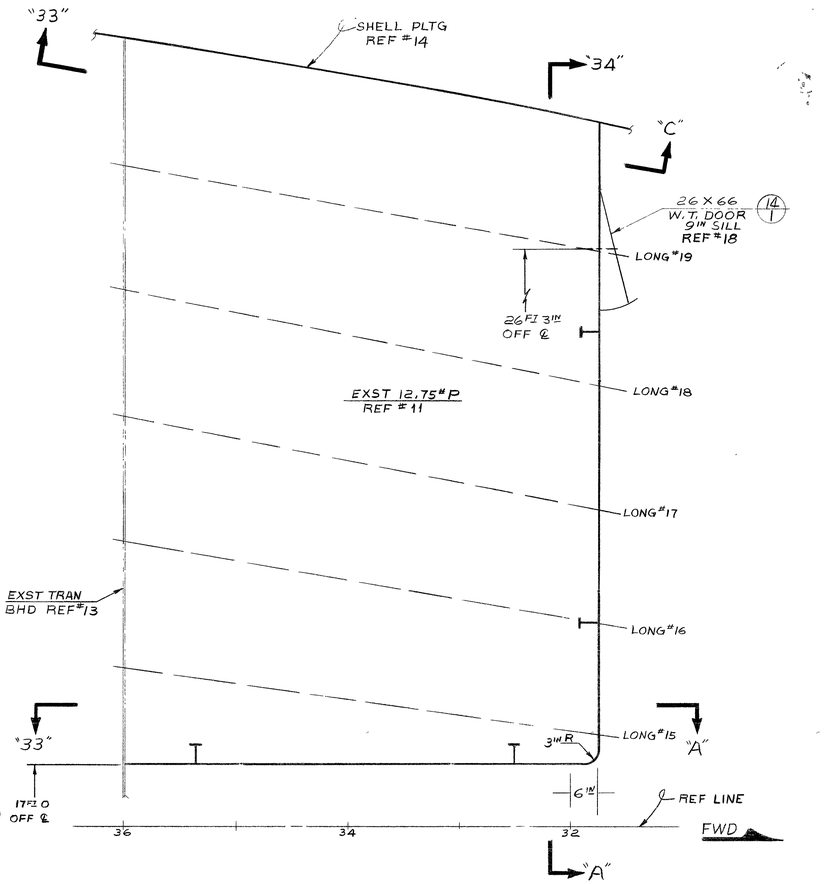

PLAN VIEW "31-A"
FAN ROOM MN DK PORT
SCALE: 1" = 1 FT 0

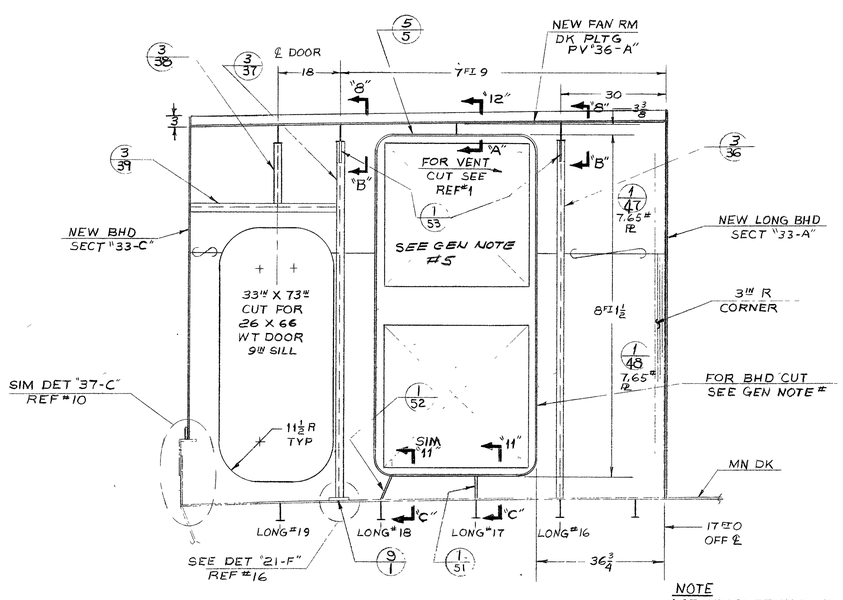

NOTE
FOR MEASUREMENT NOT GIVEN SEE SECT "33-A"

SECTION "34-A"
TRANSV BHD 6" FWD FR 32
SCALE: ¾" = 1 FT 0

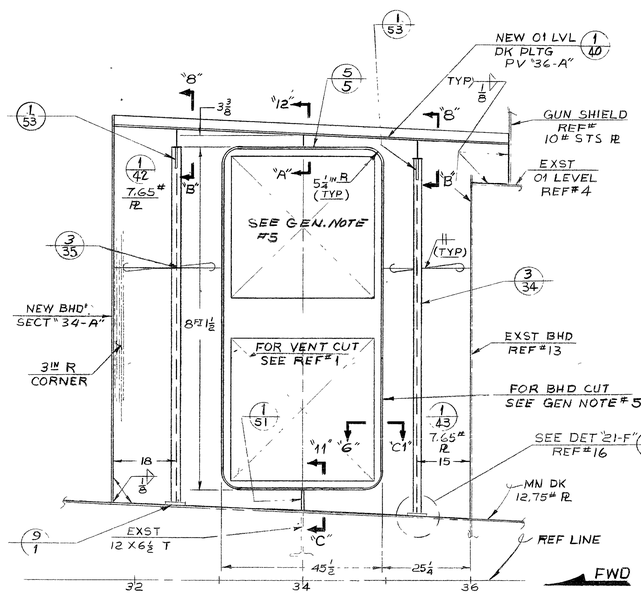

SECTION "33-A"
LONG BHD PORT LKG INBD
SCALE: ¾" = 1 FT 0

SIZE	CODE IDENT NO.	NAVSHIPS DRAWING NO.		REV
H	80090	111	4397294	-
SCALE: AS SHOWN		SHEET 7	OF	

4-TYPSKPEY-111-3-001

8ND-GNSYD-1ID12-18

CAROLINA E & F

SAE 15153 8-71 2187+

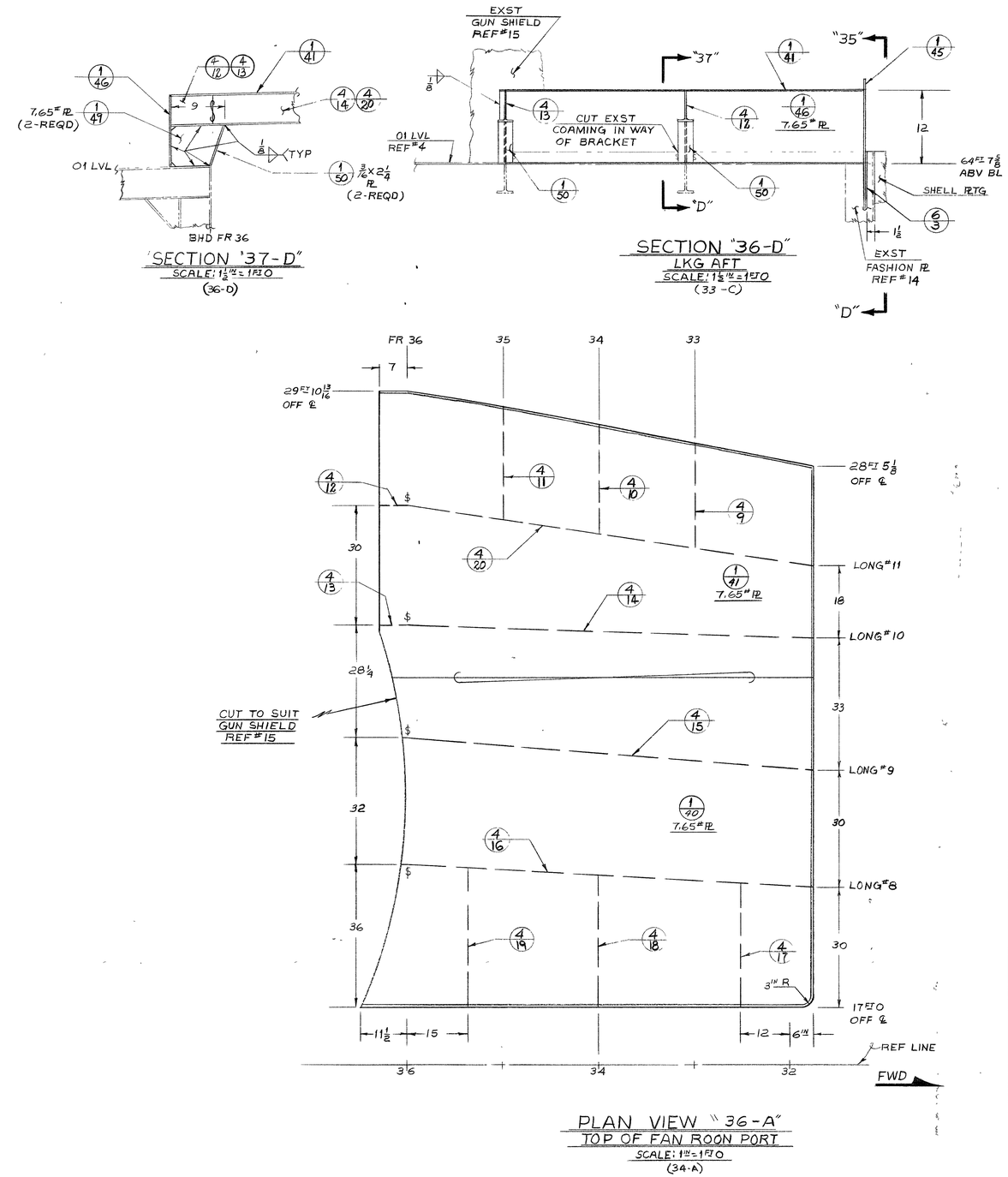

SIZE	CODE IDENT NO.	NAVSHIPS DRAWING NO.		REV
H	80090	111	4397294	–
SCALE: AS SHOWN		SHEET 8 OF 8		

GND-ONSYD-11012-18
CAROLINA E & F
K&F 10 953 9-71 2187